

SPA MANUAL

ATLAS

CASA BLUI

CONTENTS

This manual explains how to prepare the installation site, install, operate, and maintain your spa. Read all instructions before installation or use, and keep this manual for future reference. Installation and electrical connections must be completed by qualified professionals.

PRE-INSTALLATION 6

INSTALLATION 20

SPA INTERFACE USE 29

GENERAL MAINTENANCE 43

IMPORTANT SAFETY INSTRUCTIONS

SUPERVISION & SAFE ACCESS — RISK OF DROWNING
• Children under 5 years old must not use the spa. Older children require constant adult supervision.
• Users with reduced physical, sensory or cognitive capabilities, or insufficient experience, require proper supervision.
• Enter and exit carefully; wet steps and surfaces can be slippery. Do not dive, submerge your head or swallow spa water.
• Keep glassware and other breakable objects away from the spa area.

SUCTION SAFETY — RISK OF ENTRAPMENT
• Do not use the spa if a suction guard, fitting, drain cover, filter or skimmer component is missing, damaged, loose or improperly installed. Contact your dealer for service.
• Keep hair, loose clothing and jewelry away from suction fittings and moving parts. Never sit or stand on suction covers or the skimmer assembly.
• Never replace a suction fitting with one rated below the original specified flow rate.

COVER SAFETY
• After each use, secure the cover with all provided straps, fasteners and locks. Replace a damaged cover. Prevent unauthorized access; a cover does not replace adult supervision.
• The cover is not load-bearing. Do not walk, sit, jump or place objects on it.

WATER TEMPERATURE & HEALTH
• Water must never exceed 104°F (40°C). Before entering, check the actual temperature with an accurate thermometer; control readings may vary.
• Lower temperatures are recommended for children aged 5 and older and for prolonged use. Use caution when bathing alone; overheating can cause fainting or drowning.
• Pregnant or possibly pregnant women must consult a physician before use. Do not enter water above 100°F (38°C) or stay longer than 10 minutes when pregnant.
• Consult a physician before use if taking medication or if you have obesity, heart disease, high or low blood pressure, circulatory disorders, diabetes, clotting disorders or similar conditions.
• Shower before entering. Do not use the spa if you have diarrhea or an infectious, skin or contagious disease.
• Do not use the spa immediately after strenuous exercise.

HYPERTHERMIA
• Prolonged immersion can raise body temperature above normal and cause dizziness, drowsiness, lethargy, fainting, impaired judgment, failure to recognize heat or the need to exit, inability to leave the spa, fetal damage during pregnancy and drowning.
• Exit immediately if uncomfortable, dizzy or sleepy.
• Alcohol, drugs or medication before or during use can cause unconsciousness, drowning or fatal hyperthermia.

INSTALLATION & MAINTENANCE SAFETY

INSTALLATION & ELECTRICAL SAFETY
RISK OF ELECTRIC SHOCK

• Read and follow all instructions before installation, operation or maintenance.

• Installation, wiring, grounding and bonding must be completed by qualified professionals; use a licensed electrician for electrical work. Follow the locally adopted National Electrical Code (NEC) and applicable state and local codes.

• Keep portable electrical appliances and devices at least 5 ft (1.5 m) from the spa. Fixed installations must meet applicable electrical codes.

• Properly ground and bond the spa and all required nearby metal components in accordance with applicable electrical codes.

• The electrical supply must have GFCI protection. Never bypass it. Test the GFCI before each use, following its manufacturer's instructions.

• If the GFCI test fails or an electrical fault occurs, disconnect power. Do not use the spa or restore power until the fault is identified and corrected.

• Do not turn on power until the spa is filled to the specified operating water level.

• Unauthorized modifications, tampering, misuse or improper maintenance may cause injury, death or damage and may void the warranty.

• Keep unauthorized persons away from installation and maintenance work areas.

MAINTENANCE & CHEMICAL SAFETY

• Before maintenance, disconnect all electrical supply circuits and the water supply.

• Follow the manufacturer's water chemistry and maintenance instructions to keep the spa hygienic and operating correctly.

• Wear appropriate protective equipment during installation, maintenance and chemical handling.

• Use only manufacturer-approved products. Follow chemical labels and never mix concentrated chemicals together.

• Clean filters regularly. When draining, clean and dry associated components where applicable.

• Keep tools and loose objects out of the spa during installation and maintenance to prevent damage.

• Store chemicals in closed, original labeled containers, away from children, pets, heat and moisture. Never store them in the equipment compartment.

• Indoor or enclosed installations require suitable ventilation to control humidity and chemical vapors. Consult a qualified building professional.

• Secure the spa area against unauthorized access. Follow applicable state and local requirements for fences, gates and other barriers.

• Do not use the spa during electrical storms or other severe weather.

• Dispose of packaging according to local regulations; keep it away from children and animals.

Contact the manufacturer if any instruction is unclear.
Keep this manual for future reference.

WARRANTY SUMMARY

This page summarizes selected requirements and exclusions in the separate Casa Blui Warranty Certificate. The Certificate governs if this summary differs. The following circumstances may affect coverage or service costs as specified there:

1. Installation or electrical connections that do not comply with applicable codes or the instructions supplied with the product.

2. Pre-installation or installation that does not follow the product's requirements, including work performed by personnel who lack the required qualifications.

3. Incorrect preparation of the installation site, including inadequate support, drainage, or service access. Related damage or additional service costs may be excluded, except where the Seller or an installer acting on its behalf was responsible.

4. Accidents or damage caused by noncompliant installation or use of the product.

5. Masonry work that prevents removal and handling of the product or its defective parts. The Buyer bears necessary product-removal costs; related damage or additional service costs are subject to the Certificate.

6. Failure to submit digital copies of the Pre-installation and Installation checklists. If the mandatory Pre-installation checklist is not submitted and approved before installation, claims related to the conditions it addresses are excluded. Unrelated claims remain eligible.

7. Failure by the installer to inspect the product before installation and promptly report discovered damage or defects to the Seller.

8. Failure by the installer, acting on behalf of the Seller or Buyer, to verify correct operation of the product and its components after installation, including proper installation and water parameters where relevant. If this verification is not completed, claims concerning installation, startup operation, or watertightness addressed by the required verification are not covered.

COVERAGE EXCLUSION
Damage resulting from unusual or extraordinary weather conditions or climatic events is not covered by the warranty.

Important note:

This summary does not replace or amend the Warranty Certificate. Consult the certificate supplied with the product for complete terms.

PRE-INSTALLATION

1 DIMENSIONS AND SPECIFICATIONS 7

2 SITE SELECTION 12

3 FOUNDATION AND SERVICE ACCESS 13

4 FILL WATER REQUIREMENTS 15

5 ELECTRICAL REQUIREMENTS 16

1 MEASUREMENTS AND TECHNICAL SPECIFICATIONS

Top View

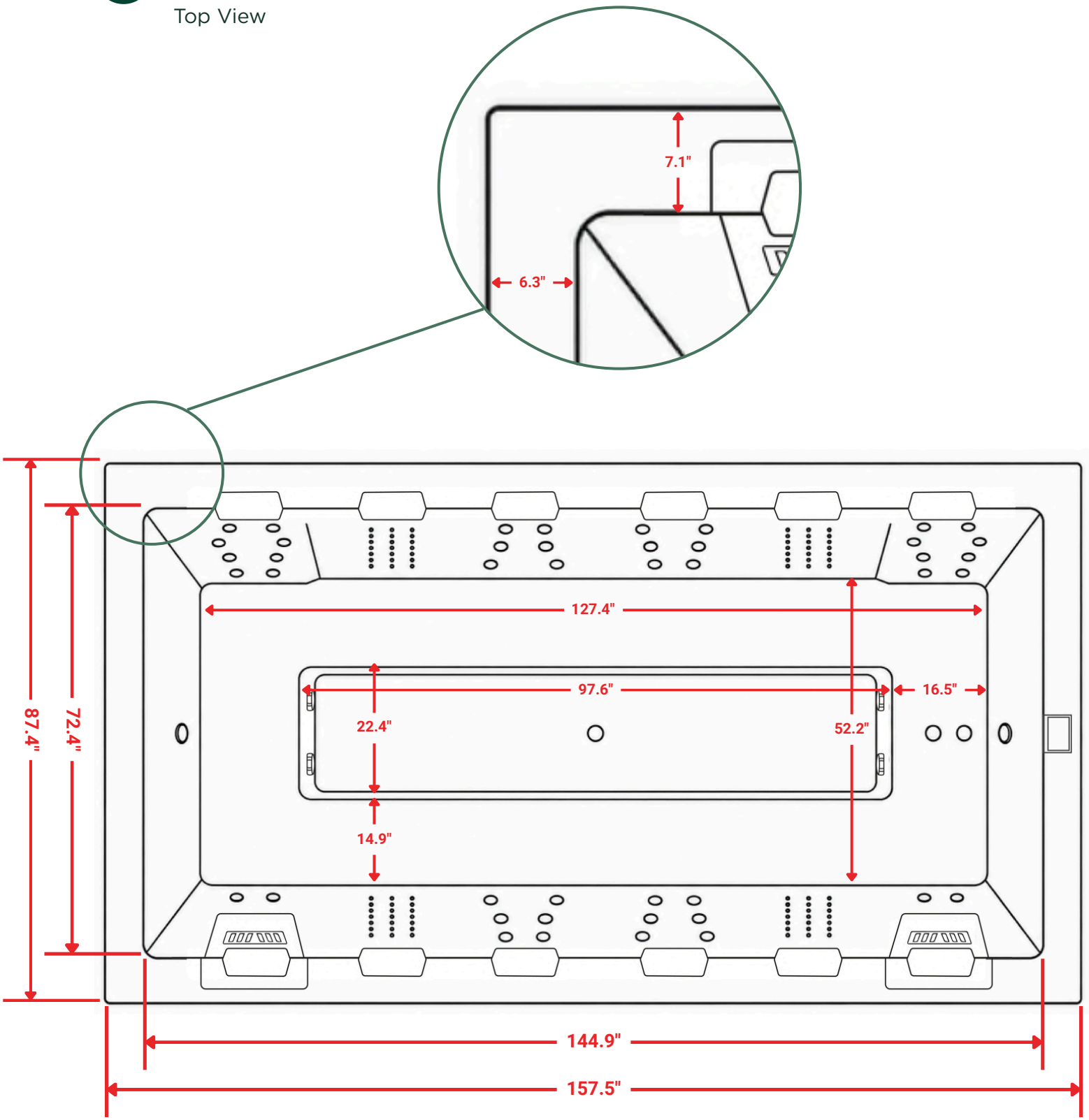

The manufacturer reserves the right to make improvements to the equipment at any time, without prior notice.
Partial reproduction without the manufacturer's consent is prohibited.
Measurements are purely indicative and not binding.

DIMENSIONS AND SPECIFICATIONS

Side View

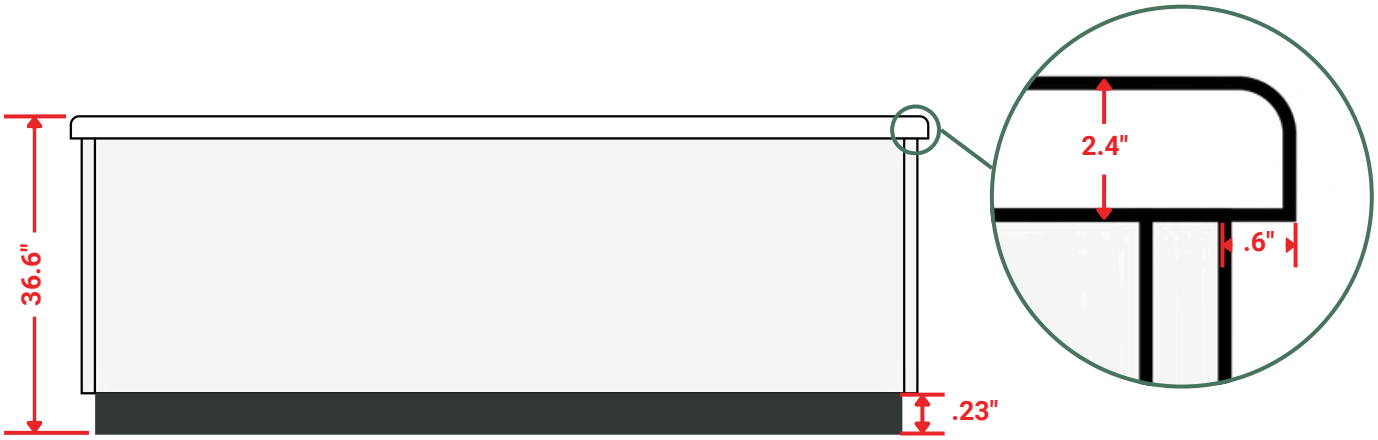

Side Section

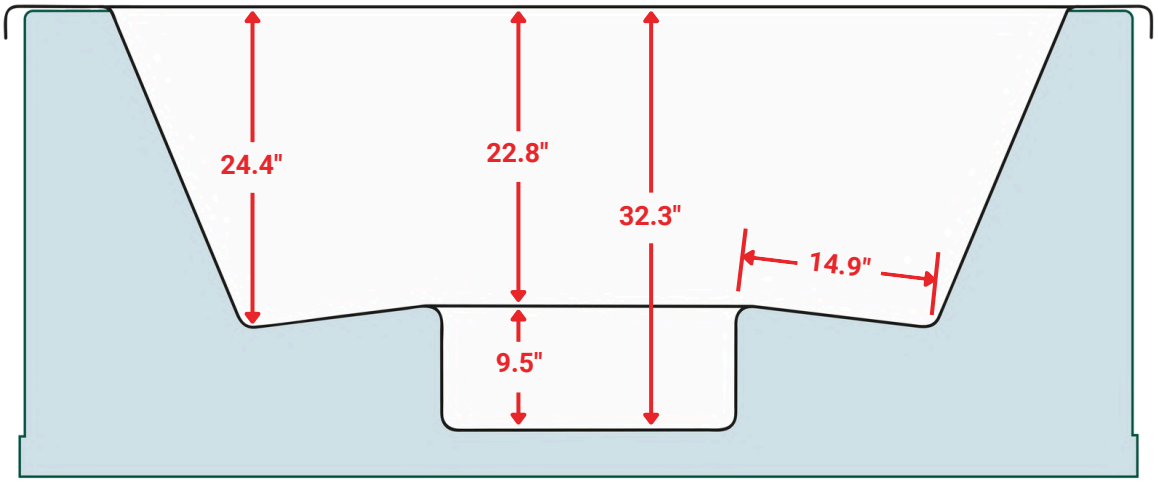

The manufacturer reserves the right to make improvements to the equipment at any time, without prior notice. Partial reproduction without the manufacturer's consent is prohibited.
Dimensions are approximate. Verify the actual spa dimensions before preparing the foundation, making openings or planning delivery. Allow additional clearance for moving equipment, service access and accessories.

TECHNICAL SPECIFICATIONS



General information

Capacity:	🧍🧍🧍🧍🧍🧍🧍🧍🧍🧍🧍🧍
Total seats:	10 Benches + 2 Loungers
Outer dimensions:	157.5″ x 87.4″ x 36.6”
Water capacity:	655 US gal (2,480 L)
Dry weight:	1,565 lb
Occupied weight:	8,881 lb (12 × 154 lb)
Concrete pad required:	YES

Componentry details

Massage pumps:	2 **x** 2 **hp - 2 x 3 hp**
Circulation pump:	1 **hp**
Filter type:	Cartridge
Skimmer:	YES
Water sanitization:	Ozonator, UV
Lighting:	Internal Led spotlights
Touchscreen:	Balboa SpaTouch4
Control system:	Balboa BP2000G1
Heater type:	Electric resistor
Wifi/App:	YES

Packaging details

Number of packages:	2 (spa + cover)
Package type:	Reinforced crate
Package weight (spa):	1,764 lb
Package weight (cabinet):	N/A
Package size (spa):	162″ × 39″ × 95″
Package size (cabinet):	N/A
Rec. moving equipment:	forklift/crane

Electrical requirements

Heater power:	**11 kW** (5.5 kW+5.5 kW)
Voltage:	240V - 60hz
Breaker box:	50A + 30A
Connection type:	Hardwired-parallel
min. Wiring gauge:	6 Awg

NOTE:

If your project's electrical supply deviates from these requirements, make sure to note it to your installations manager so they can asses your case and arrange any accomodations they deem necessary for the viability of the pending installation.

CASA BLUI'S SCOPE OF SERVICES

PRE-INSTALLATION

- User onboarding.
- Technician onboarding.
- Installer onboarding.
- Electrical system validation.
- Pre-installation requirement checklist validation

INSTALLATION

- Curbside unloading.

When the purchased service is Delivery & Installation, the following are also included:

- Positioning.
- Cabinet assembly.
- Electrical connection.
- Startup and functionality verification.

POST-INSTALLATION

- Post-installation follow-up meeting.
- After-sales assistance and app support.
- **Warranty coverage (consult CasaBlui's warranty certificate).**
- Technical support and warranty claim assessment.
- Arrangement and dispatch of partnered technicians in case of covered warranty claims.
- Provision and sale of required consumables. Such as filter cartridges, water care kits, etc.

PRE-INSTALLATION, out of scope

- Supporting base structural design and validation.
- Supporting base & drainage construction work.
- Surrounding deck design and construction work, if any.
- Electrical system installation, including breaker box setup, conduit laying, and wiring Whip.

INSTALLATION, out of scope

- Furnishing the product's surroundings.
- providing or installing any accessories not included in the product's purchase agreement.
- Procurement of water supply or tools for filling up during product startup.

POST INSTALLATION, out of scope

- Product modification/tampering.
- Installation of non-approved accessories requiring product intervention.
- Surface finish maintenance (When not related to a warranty claim).
- Water care and filter maintenance.
- Spa removal and disposal in case of replacement.

IMPORTANT NOTE:

All construction work sub-contracted by the Customer, including electrical, supporting pad, decking and other **MUST** be carried out by certified and qualified professionals.

All sub-contracted construction work **MUST** be carried out according to the Pre installation requirements stated in **sections 2-5** of this manual.

BEFORE DELIVERY

DELIVERY ACCESS

Check the delivery route for clear width and height, tight turns, slopes, steps and overhead obstructions. Confirm the approved transport position and the space required for moving equipment with your dealer. Arrange specialist lifting where necessary.

Before installation, a qualified technician must complete and sign off the Pre-installation checklist referenced on **page 21** and retain the record with the installation documentation. **A digital copy of every checklist must be provided to your Casa Blui Installations manager.**

⚠ The customer must obtain all permits required **before** site preparation and arrange any preliminary inspections required by applicable state and local authorities. Verify barrier and controlled-access requirements.

⚠ Before digging, follow state and local utility-location requirements. Have buried services identified and marked, and observe required waiting periods before excavation.

TEMPORARY SUPPORT

Have a qualified contractor prepare the site. Arrange installation promptly after delivery. If temporary positioning is necessary, confirm the approved support arrangement with Casa Blui before unloading. Keep the spa level and supported in the approved locations.

Protect the empty spa from direct sunlight and excessive heat while awaiting installation.

Keep temporary positioning as brief as possible. Damage caused by direct sunlight or inadequate support is subject to the Warranty Certificate.

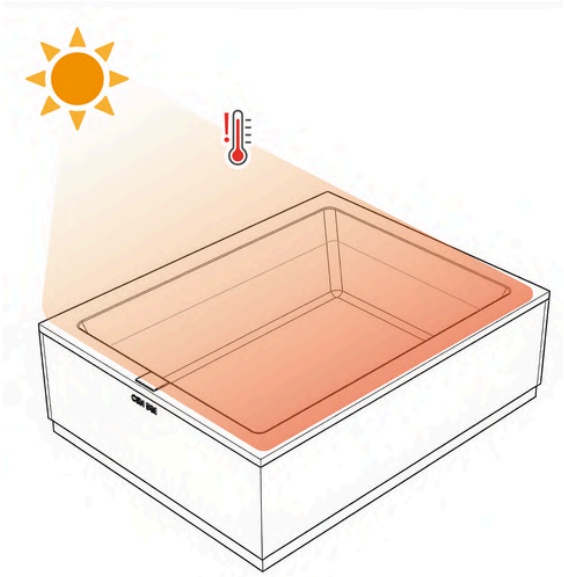

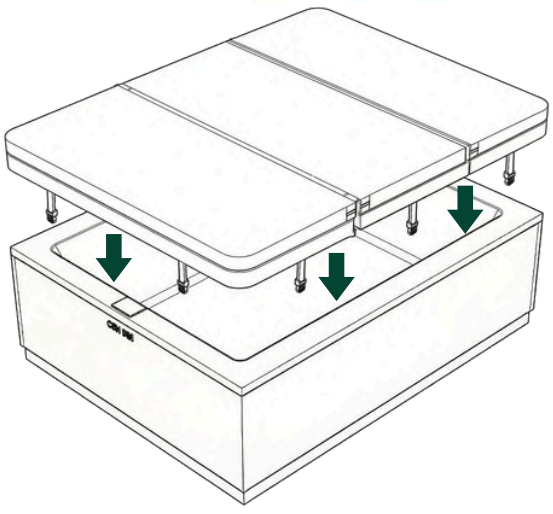

2 SITE SELECTION

INDOOR INSTALLATION

Have a qualified building professional assess ventilation, humidity and condensation control. Use moisture-resistant surrounding finishes and flooring that provides proper traction when wet. Plan drainage for splashes, overflow and potential leaks, including protection of structures below the spa.

OUTDOOR INSTALLATION

Consider privacy, nearby properties, the view and local site requirements.

Avoid locations exposed to roof runoff or concentrated heat reflected by windows and other surfaces. Follow the access-control requirements in the safety section.

GROUND CONDITIONS

Consider the geological composition of the soil on which the supporting platform will be built.

Soils that are very sandy, permeable or subject to flooding could compromise the durability of the spa's support platform.

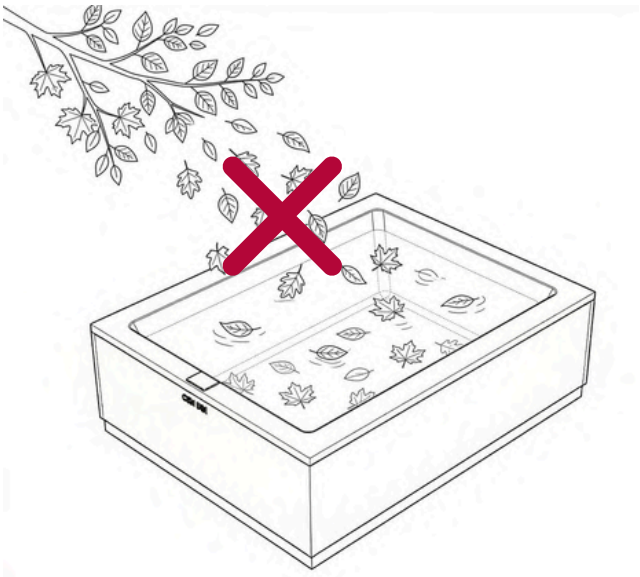

ELECTRICAL CLEARANCES

Fixed electrical installations, including outlets, switches and lighting, must comply with applicable local electrical regulations. Have a qualified electrician confirm the required clearances before installation.

SERVICE ACCESS

Keep service panels removable and provide enough space to inspect, repair and replace installed equipment. Allow additional clearance for steps and cover-lifting accessories.

Ambient operating temperature:
32–122°F (0–50°C).

This refers to the temperature range in the space where the product is installed, not the water-temperature setting.

DELIVERY ROUTE

Keep the delivery and walking routes clear. Allow for the spa, moving equipment and installed accessories. See Before Delivery on **page 11**.

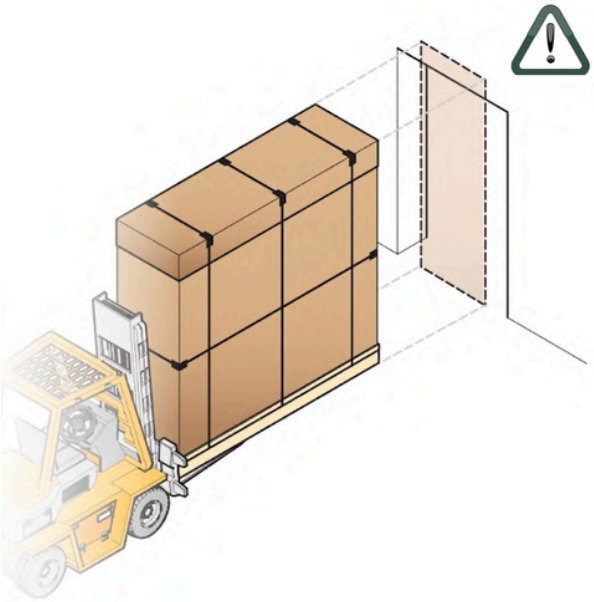

3 FOUNDATION AND SERVICE ACCESS

⚠ Before construction, coordinate the connections and equipment access with your installer. See Electrical Requirements on **pages 16-17** and Equipment Layout on **page 18**.

ABOVE-GROUND INSTALLATIONS

FREESTANDING INSTALLATIONS

Provide a level concrete slab at least 4 in (102 mm) thick.

The pad must extend at least 2 in (51 mm) beyond the spa footprint on every side.

If steps will be installed, allow additional pad area for their actual footprint.

Do not use wedges or shims to level the spa.

The foundation must support the spa's occupied weight (spa, water and occupants) without settlement or uneven support. Have a qualified structural engineer verify the required capacity for the installation site.

Have a licensed electrician determine and complete the required bonding of reinforcing steel in accordance with applicable electrical codes.

Necessary installation features

1. A drainage grating around the perimeter to help preserve the equipment and the structure (even for indoor installations).
2. A non-slip flooring around the spa.
3. The concrete pad described.
4. Leave 20″ around spa.

PAD FOOTPRINT EXCAVATION

Before excavation, have underground utilities such as waterlines and wiring properly located.

In case that any underground feature exists within the intended pad footprint, make sure it is properly secured and protected prior to pouring, relocate or re-route the feature whenever possible.

MINIMUM CONCRETE PAD

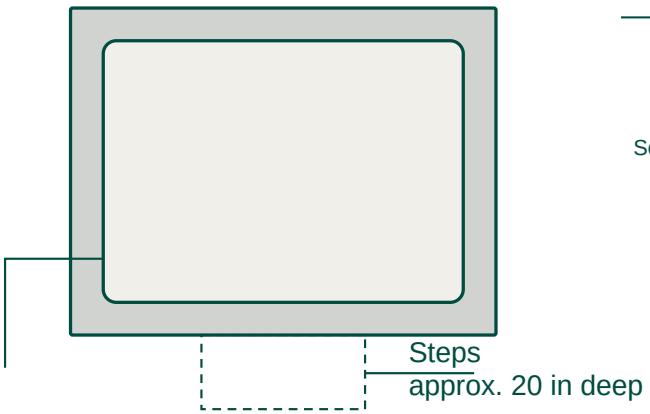

2 in minimum on every side
Extend the pad for the actual step footprint.
Pad margin is not service clearance.
Plan view · Not to scale · Dimensions approximate

LEVEL SUPPORTING FOUNDATION

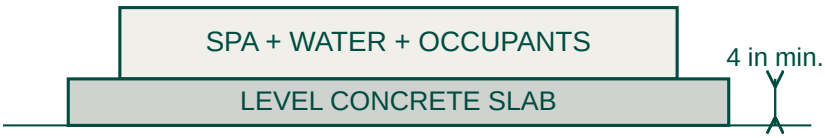

At least 2 in beyond the spa on every side
Provide non-slip surroundings and suitable drainage.
Verify support capacity for the installation site.
Section schematic · Not to scale · Ground preparation by qualified professionals

RECESSED INSTALLATIONS

Provide a level concrete slab at least 4 in (102 mm) thick, extending at least 2 in (51 mm) beyond the spa footprint on every side. Allow additional area for installed steps.

The foundation must support the spa, water and occupants without settlement or uneven support. Have a qualified structural engineer verify the required capacity for the installation site.

Do not use wedges or shims to level the spa. Have a licensed electrician determine and complete the required bonding of reinforcing steel in accordance with applicable electrical codes.

NECESSARY INSTALLATION FEATURES

A — Provide access for panel removal and equipment servicing. Confirm the necessary openings and working space with Casa Blui before construction.
B — Provide drainage around the spa and within the recess, including indoor installations.
C — Use non-slip flooring around the spa.
D — Equipment-compartment ventilation must suit the enclosure and installed equipment. Confirm vent sizes and locations with Casa Blui before construction.
E — Recess insulation: see the note below.

Insulation does not replace freeze protection or professional winterization. Have a qualified professional select materials for the site climate and enclosure. Keep drainage and ventilation paths clear.

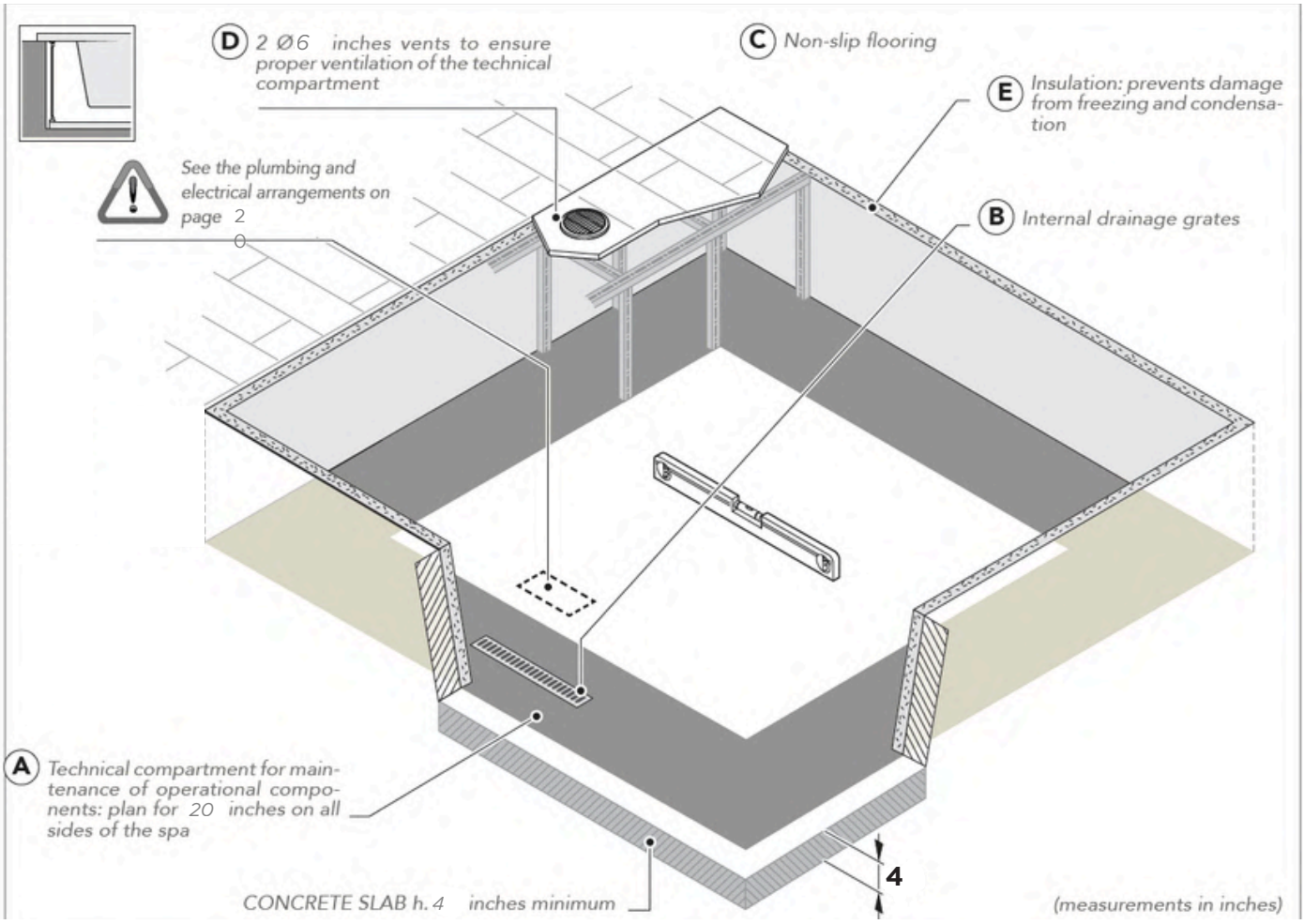

4 FILL WATER REQUIREMENTS

FILL-WATER TESTING
Test the source water before filling, whether municipal or well water. Where staining or source-water conditions warrant it, include metals in the analysis. Select treatment from the results.

WATER-BALANCE TARGETS
pH: 7.2–7.8.
Total alkalinity: 80–120 ppm.
Calcium hardness: 150–250 ppm as $CaCO_3$.

CALCIUM HARDNESS
Calcium hardness measures dissolved calcium, expressed as ppm as $CaCO_3$. Do not substitute a total-hardness reading, which also includes magnesium.

TOTAL ALKALINITY AND pH
Adjust alkalinity before making final pH corrections. Use compatible spa products according to their labels; circulate and retest. If pH is low, use a spa pH increaser; if high, use a spa pH decreaser.

BEFORE USE
Water balance does not replace disinfection. We recommend bromine at 2-6 ppm or chlorine at a minimum acceptable range of 0.5-1.5 ppm, within the sanitizer label's operating limits. Test before each use. Follow the detailed testing, adjustment and disinfection instructions on Casa Blui's **WATER CARE_MANUAL**.

5 ELECTRICAL REQUIREMENTS

BEFORE ELECTRICAL WORK

Read and follow all instructions. Electrical installation must be completed by a licensed electrician in accordance with applicable state and local requirements and the instructions supplied with the purchased equipment.

SUPPLY AND PROTECTION

This edition covers the **11 kW** heating configuration with a 240 V supply and a **Dual BP2000G1 + Auxiliary heater control**. Follow the equipment ratings and the wiring diagram supplied with the purchased unit.

A licensed electrician must select and install the required circuit protection, conductors and connections. External GFCI protection is required; the spa does not include a GFCI.

General electrical system layout diagram

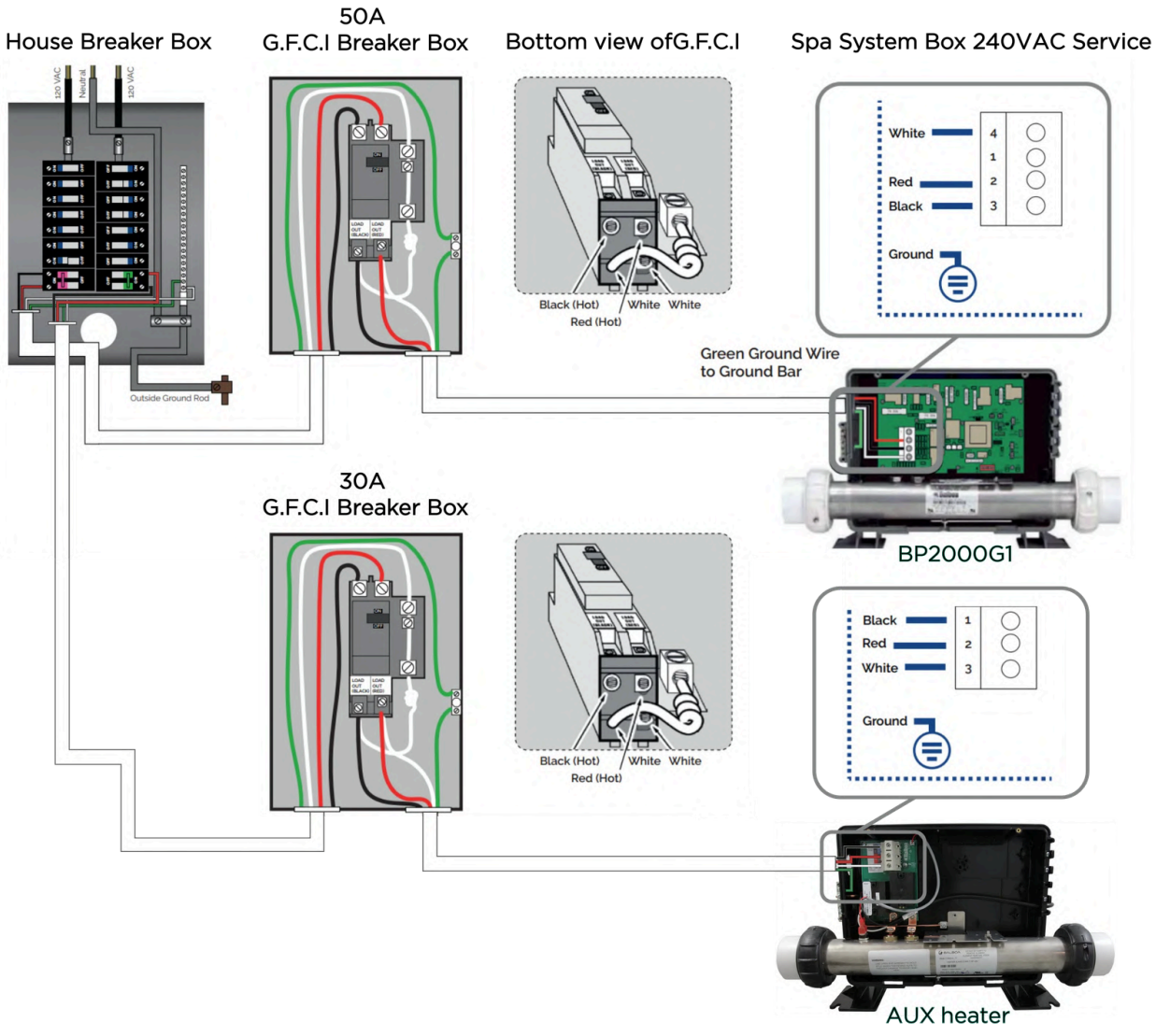

Local code related requirements

GROUNDING, BONDING AND FIXED ELECTRICAL INSTALLATIONS

Use the equipment terminals identified for grounding and bonding. The electrician must determine the required conductors, connections and bonding of nearby metal components under the locally adopted electrical codes and equipment instructions. Do not interchange grounding and bonding functions.

EXTERNAL GFCI PROTECTION

⚠ **WARNING —** A licensed electrician must install external GFCI protection. The spa does not include a GFCI.

BEFORE EACH USE
Test each GFCI following its manufacturer's instructions. With the spa operating, press the GFCI TEST button. The protected circuit must disconnect. Reset the GFCI according to its manufacturer's instructions and confirm normal operation.

⚠ **SERVICE-DOOR INTERLOCK — IF FITTED**
Opening a service door may stop operation on units equipped with an interlock. This does not replace the GFCI test.

⚠ **IF THE TEST FAILS**
If a GFCI fails to stop the spa or cannot be reset correctly, disconnect all spa electrical supplies until the fault has been identified and corrected.

The manufacturer is not responsible for connections that do not comply with local codes, the specifications in this manual, or unauthorized alterations to electrical components.

Fixed electrical installations, including outlets, switches and lighting, must comply with applicable local electrical regulations. Have a licensed electrician confirm the required clearances before installation.

NOTE: Electrical breaker performance

Certain brands of thermal-magnetic circuit breakers may not perform reliably when the GFCI test is conducted on some products. In some cases, the test may produce no response. **A non-responsive GFCI means a failed test and requires immediate disconnection.**

According to Balboa Water Group official reports, **EATON** is the only brand confirmed to exhibit this issue consistently in their GFCI protected breakers and dedicated GFCI's to date. If you have any questions, always consult your installation supervisor first.

EQUIPMENT LAYOUT

Direct jets

Microjets

Roto-jets

Suctioner

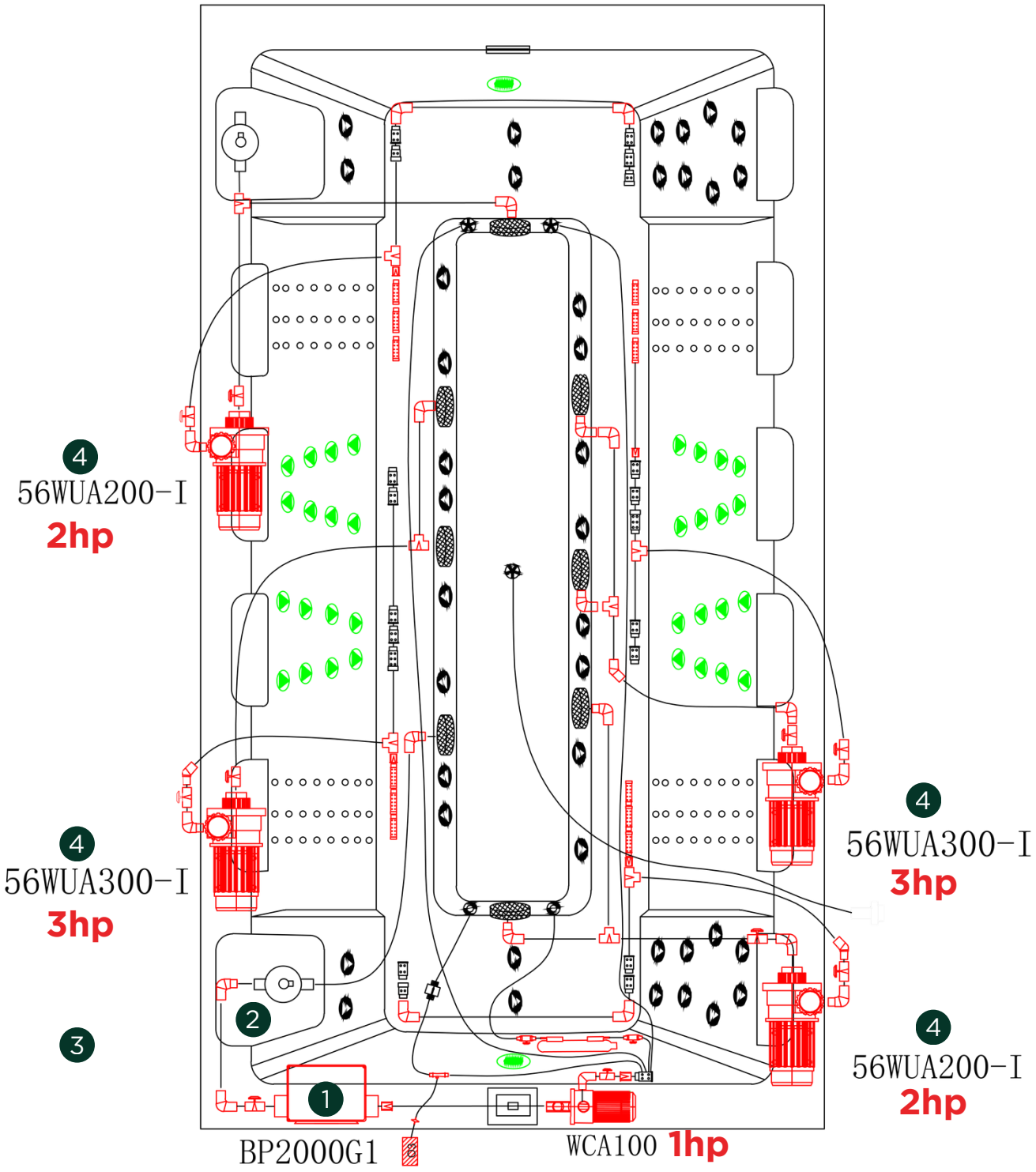

1 Main control pack

2 Filter housing

3 Circulation pump

4 Massage pumps

Electrical inlet & drainage valve locations

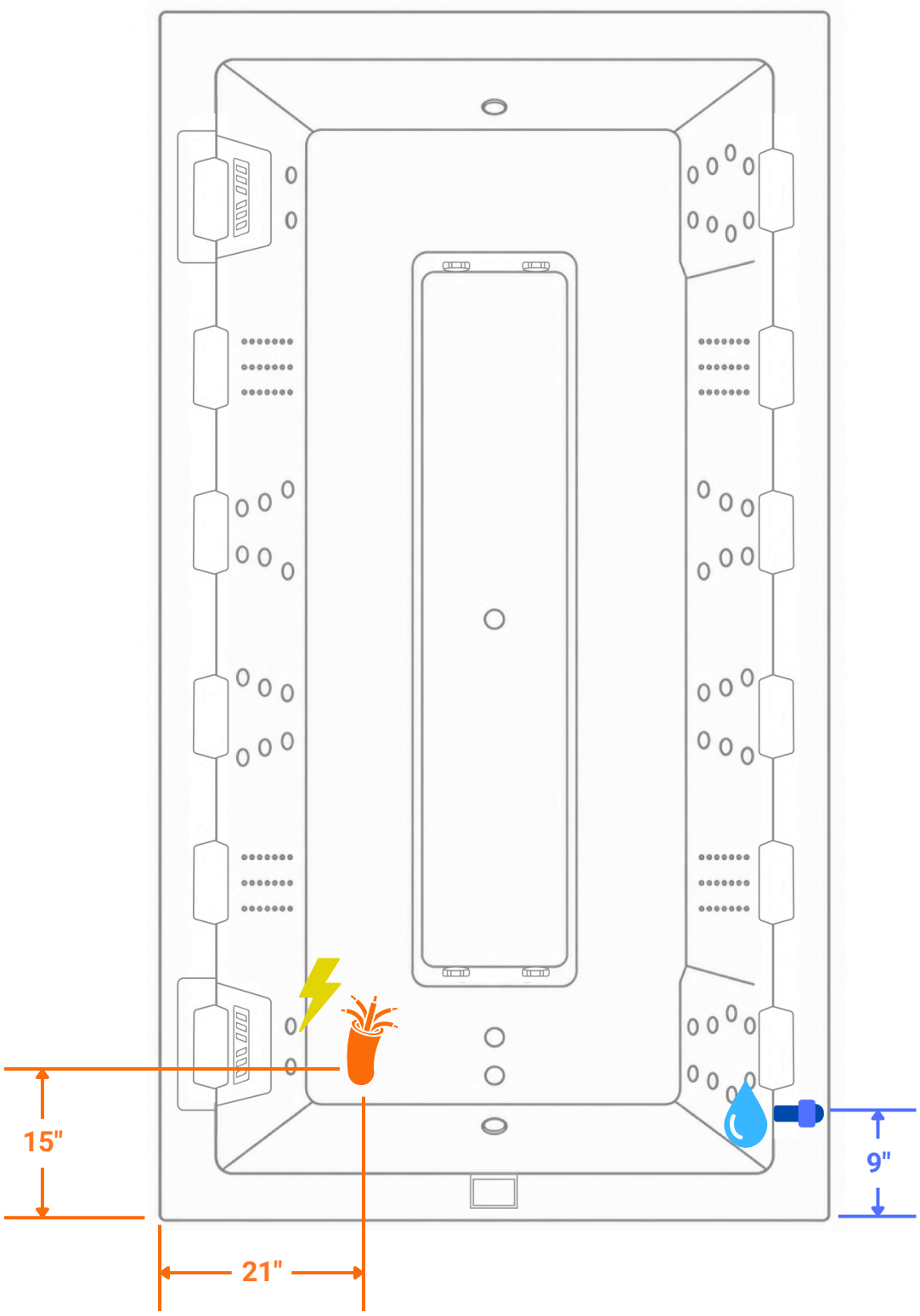

Drawing not to scale, always measure accordingly when planning electrical supply and drainage availability.

INSTALLATION

1 PRE-INSTALLATION CHECKLIST 21

2 DELIVERY INSPECTION 21

3 HANDLING AND POSITIONING 22

4 ALUMINUM CABINET REMOVAL AND REINSTALLATION 23

5 ELECTRICAL DIAGRAMS AND CONFIGURATION 24

6 FILLING THE SPA & COVER 26

7 INITIAL STARTUP 28

8 INSTALLATION CHECKLIST & OWNER HANDOVER 28

1 Pre-installation checklist

Before installation, a qualified technician must check and sign off the following:

Check that:
A level concrete slab at least 4 in (102 mm) thick extends at least 2 in (51 mm) beyond the spa on every side. Allow additional area for steps. The support has been verified for the spa, water and occupants. See **pages 13–14**.

- Equipment-compartment ventilation has been assessed for the enclosure and installed equipment, and the required provisions are in place. See **page 14**.
- Drainage grating around the perimeter has been installed to help preserve the equipment and the structure (even for indoor installations);
- Non-slip flooring has been installed in the area around the spa
- For a recessed installation, the required openings and working space allow panel removal and equipment servicing. Confirm the arrangement with Casa Blui. See **page 14**.
- A licensed electrician has completed and checked the electrical installation in accordance with applicable state and local requirements. See **pages 16–18**.
- The source water has been tested and treated to meet Fill Water Requirements on **page 15**. Retest after treatment and before use.
- Freeze protection for outdoor recessed installations has been assessed for the site. Insulation alone does not winterize the spa.

SITE PREPARATION NOTES

OUTDOOR INSTALLATION

A licensed electrician must select and install the wiring and raceway system suitable for the site, in accordance with applicable electrical codes and the installed equipment's instructions.

Choose a location that avoids flooding and accumulated debris. Provide suitable non-slip flooring and keep equipment access clear. See Site Selection on **page 12**.

INDOOR INSTALLATION

Preparations
In the area used to access the spa it is recommended to install anti-slip flooring. The evaporation of water in the spa in the presence of high internal temperatures can generate very high levels of humidity in the environment. To avoid this problem, provide good natural or forced ventilation in the installation environment and, if necessary, a dehumidification system. Damage caused by this phenomenon is not covered by the manufacturer warranty.

Choice of position: Always take into account the size of the spa: narrow passages, doors and steps can be an obstacle to its transport to the desired place.

2 DELIVERY INSPECTION

Before unpacking the spa, inspect the packaging for damage. If it is damaged, do not proceed with installation; contact Casa Blui promptly. After unpacking, inspect the spa and its components for the conditions listed below.

Check:
That there is no visible structural damage;

That there are no cracks in the surface of the spa or in the outer covering (cracks due to incorrect transport or support are not covered by the warranty);

- The correct position of the sleeves and pipes;
- That all straps are correctly tightened.

If you notice any anomalies, do not proceed with the installation but rather promptly contact the manufacturer.

3 HANDLING AND POSITIONING

TRANSPORT

To move the spa to the place of installation a suitable lifting device (e.g., pallet jack) is required. If the installation is indoor, before moving the spa make sure that it can easily pass through the doors and hallways to reach the desired place of installation.



⚠ Movement must be carried out using personal protective equipment (e.g., gloves, safety shoes, etc.) and taking all the necessary safety precautions for those involved and to not damage the spa.



Use suitable equipment and only manufacturer-approved lifting points. Never lift by plumbing or pumps. Do not use the shell rim or cabinet as lifting points unless specifically approved.

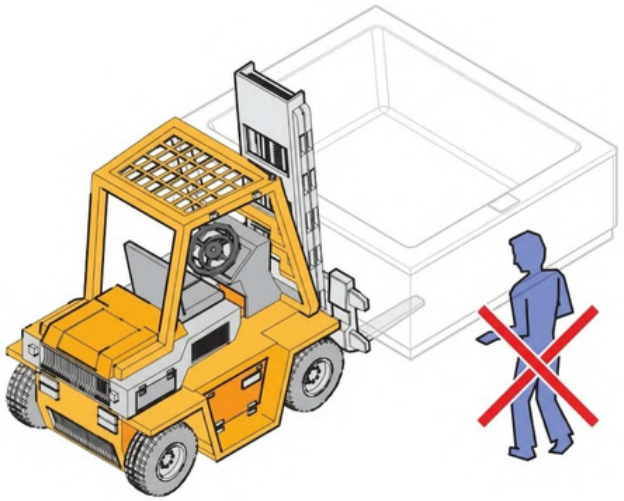

⚠ During movement, the surrounding area must be kept free of persons not involved in the operation, animals or objects (e.g., packaging, etc.) that could get in the way.

POSITIONING

TEMPORARY POSITIONING

If the spa must be positioned temporarily before installation, place it horizontally on a smooth, flat, level surface. Do not leave it empty and uncovered in direct sunlight.

POSITIONING IN THE PLANNED LOCATION

In case of outdoor or indoor installation, position the spa horizontally, placing the whole base of the unit on a smooth, flat and level surface capable of supporting the full operating weight, and ensure proper drainage and ventilation where applicable.

For a recessed installation, provide the confirmed service openings and working space described on **page 14**. Do not permanently cover access panels with concrete. Keep all supply circuits OFF during wiring. A licensed electrician must complete the connections before power is switched ON. After filling to the specified level, follow Initial startup on **page 28.**

Do not expose the spa to sunlight when it is empty and without a protection cover.

4 ALUMINUM CABINET REMOVAL AND REINSTALLATION

REMOVAL AND REINSTALLATION SEQUENCE
The aluminum panels are designed for straightforward installation and are secured to the spa structure using clamps.

1. Identify the main panel
The Casa Blui logo panel must be installed on the touch screen side.

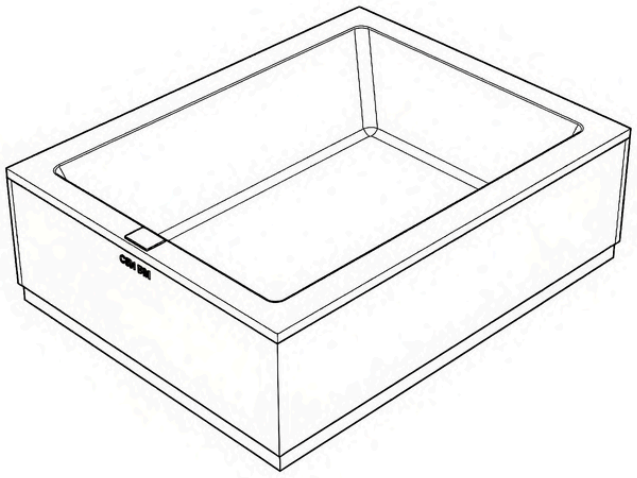

2. Remove main panel & corner pieces
Switch OFF all supply circuits and prevent restart before opening the spa. Carefully pull the corner pieces outward. Then pull from the bottom of the panel to be removed, where the clamps are located, and carefully remove it. Only a licensed electrician may make the electrical connections, with all supplies OFF. Do not switch power ON yet.

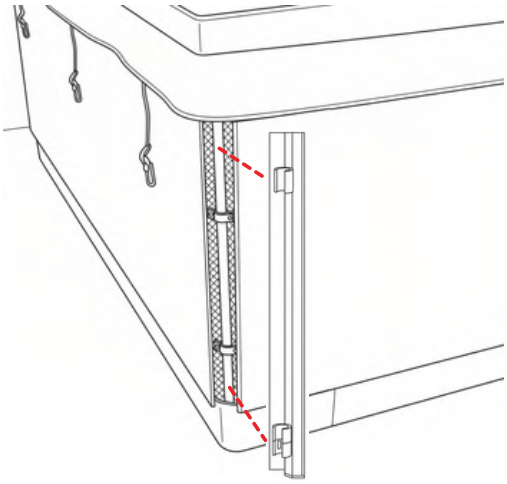

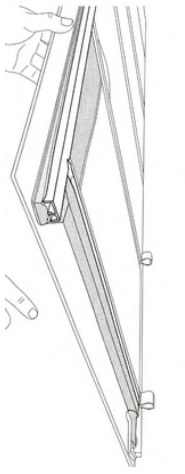

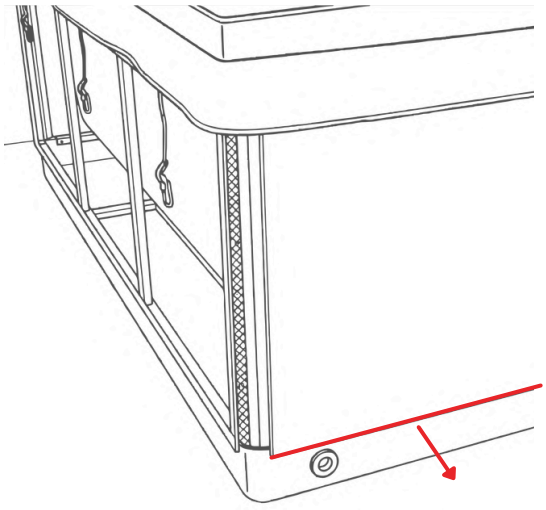

3. Reinstall the main panel
With all supplies OFF, refit the control-box cover after wiring. Then reinstall the main panel in its original position, properly aligned and securely attached.

4. Check the remaining panels
Confirm that all remaining panels are correctly aligned and securely attached.

5. Install the corner pieces
Once all panels are installed, fit the corner pieces into position. Like the panels, the corner pieces are press-fitted and secured with clamps.

5 ELECTRICAL DIAGRAMS AND CONFIGURATION

REPRESENTATIVE IMAGE ONLY.
Follow the wiring diagram supplied with the installed control unit.

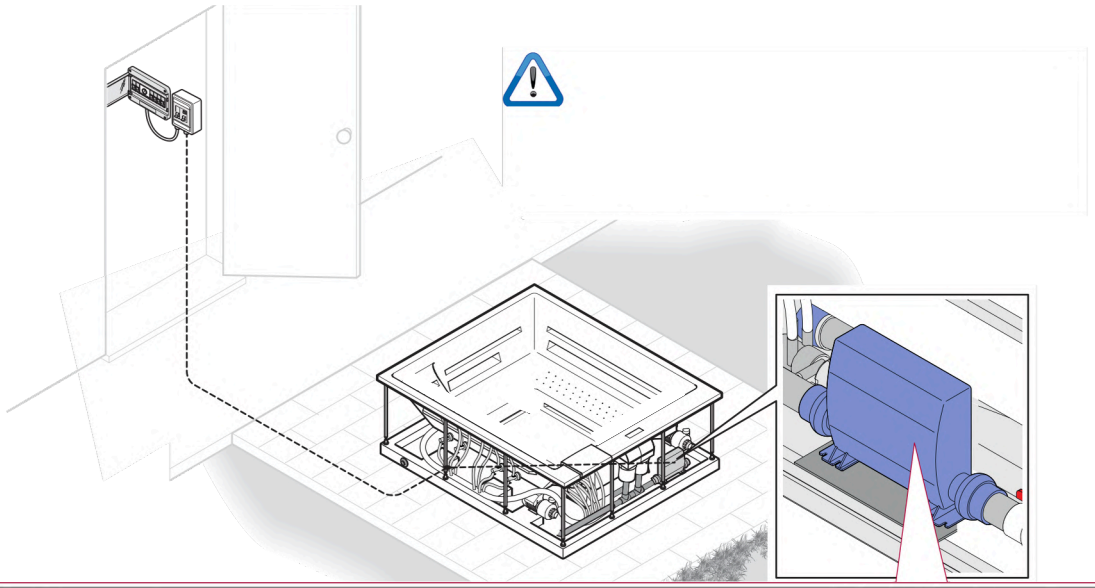

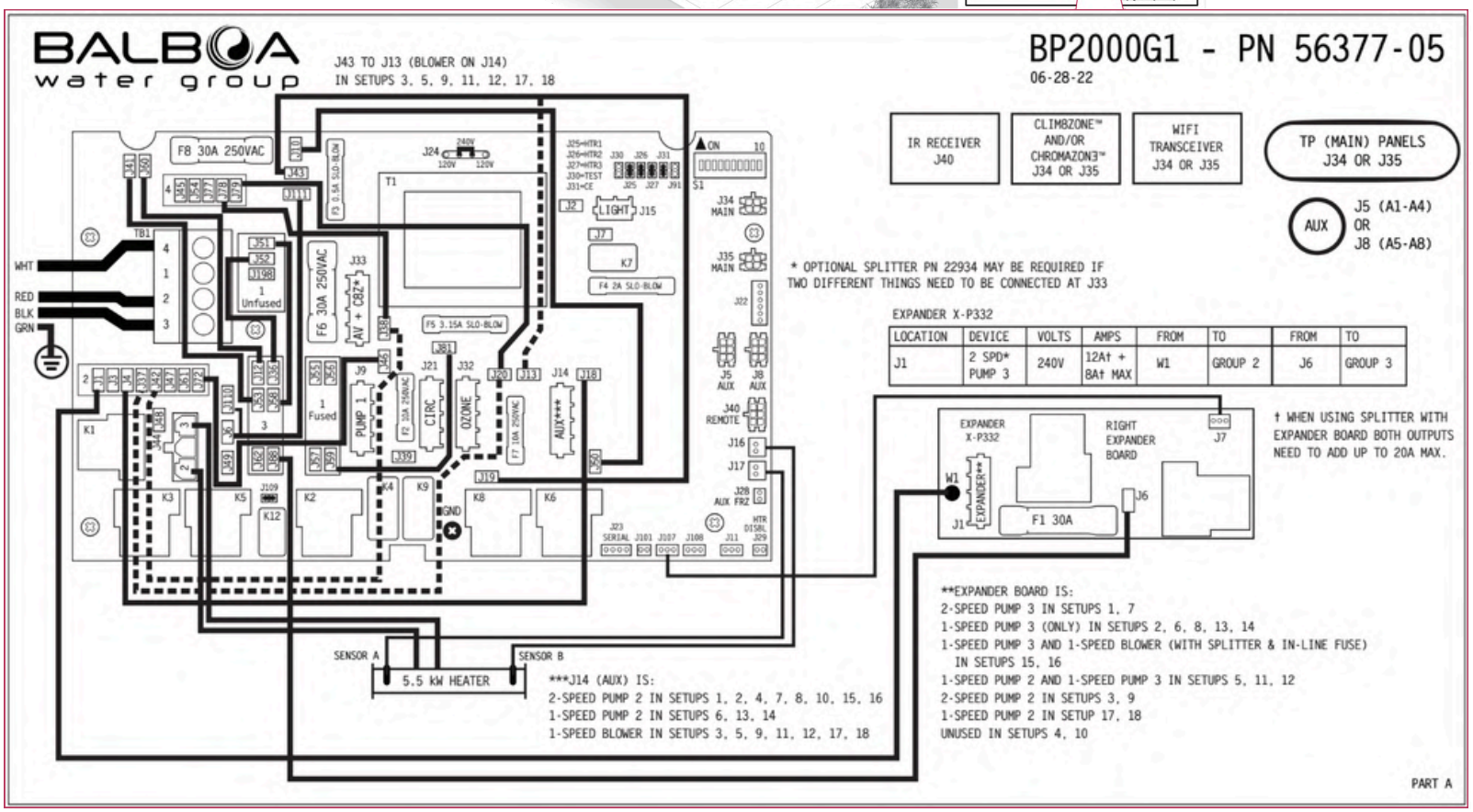

Electrical diagrams and configuration tables are for qualified personnel. Follow the wiring diagram supplied with the installed control unit. Do not change factory configuration settings unless directed by Casa Blui or an authorized service technician.

ELECTRICAL DIAGRAMS AND CONFIGURATION — REFERENCE TABLES

LOCATION	DEVICE	VOLTS	MAX AMPS	FROM	TO
J9	2-SP PUMP 1	240V	12A MAX	J46	GROUP 2
J14	1-SP PUMP 2	240V	12A MAX	J18	GROUP 2
	J14 LINE 1 CONNECTION			J43 J10	J19 J50
J15	SPA LIGHT	10V	2A*		
J21	CIRC PUMP	120V**	2A MAX	J20	GROUP 4
J32	OZONE		1A		
	CIRC AND OZONE LINE 1 CONNECTION			J81	J59
J33	AV ONLY	120V***	3A	J38	GROUP 4
J33	AV + CLIM8ZONE™ (C8Z)	240V***	2A + 8A	J38	GROUP 2
J44	HEATER	240V	5.5 kW		

* 2A LIMIT IS SHARED BY J15 SPA LIGHT AND CHROMAZONE™

** FOR 240V CIRC PUMP AND OZONE, CONNECT J20 TO GROUP 2

*** AV MUST BE REWIRED FROM 120V TO 240V WHEN USING CLIM8ZONE™ (C8Z) BY MOVING THE J38 WIRE FROM GROUP 4 TO GROUP 2.

SETUP #	CIRC PUMP	PUMP 1	PUMP 2	PUMP 3	BLOWER	TEMP SCALE
1	NONE	2-SPEED	2-SPEED	2-SPEED	NONE	°F
2	NONE	2-SPEED	2-SPEED	1-SPEED	NONE	°F
3	NONE	2-SPEED	2-SPEED	NONE	1-SPEED	°F
4	NONE	2-SPEED	2-SPEED	NONE	NONE	°F
5‡	NONE	2-SPEED	1-SPEED	1-SPEED	1-SPEED	°F
6	NONE	2-SPEED	1-SPEED	1-SPEED	NONE	°F
7	PROGRAMMABLE FILTRATION + POLLING	2-SPEED	2-SPEED	2-SPEED	NONE	°F
8	PROGRAMMABLE FILTRATION + POLLING	2-SPEED	2-SPEED	1-SPEED	NONE	°F
9	PROGRAMMABLE FILTRATION + POLLING	2-SPEED	2-SPEED	NONE	1-SPEED	°F
10	PROGRAMMABLE FILTRATION + POLLING	2-SPEED	2-SPEED	NONE	NONE	°F
11‡	PROGRAMMABLE FILTRATION + POLLING	2-SPEED	1-SPEED	1-SPEED	1-SPEED	°F
12‡	PROGRAMMABLE FILTRATION + POLLING	1-SPEED	1-SPEED	1-SPEED	1-SPEED	°F
13	PROGRAMMABLE FILTRATION + POLLING	2-SPEED	1-SPEED	1-SPEED	NONE	°F
14	PROGRAMMABLE FILTRATION + POLLING	1-SPEED	1-SPEED	1-SPEED	NONE	°F
15‡	NONE	2-SPEED	2-SPEED	1-SPEED	1-SPEED	°F
16‡	PROGRAMMABLE FILTRATION + POLLING	2-SPEED	2-SPEED	1-SPEED	1-SPEED	°F
17	PROGRAMMABLE FILTRATION + POLLING	1-SPEED	1-SPEED	NONE	1-SPEED	°F
18	NONE	2-SPEED	1-SPEED	NONE	1-SPEED	°F

PUMP 1 LOW TIMEOUT IS 15 MINUTES.

‡SETUPS 5, 11, 12, 15 AND 16 REQUIRE BP2X-WIRE KIT PN30893

SWITCHBANK S1 OFF		SWITCHBANK S1 ON
TEST MODE OFF	◀ A1	TEST MODE ON
DON'T ADD 1 HS PUMP W/HTR	A2 ▶	ADD 1 HS PUMP WITH HEAT
DON'T ADD 2 HS PUMPS W/HTR	◀ A3	ADD 2 HS PUMPS WITH HEAT
DON'T ADD 4 HS PUMPS W/HTR	◀ A4	ADD 4 HS PUMPS WITH HEAT
SPECIAL AMPERAGE RULE A	◀ A5	SPECIAL AMPERAGE RULE B
STORE SETTINGS**	◀ A6	MEMORY RESET**
1 MIN HTR COOLDOWN (ELEC)	◀ A7	5 MIN HTR COOLDOWN (GAS)
NOT ASSIGNED	◀ A8	NOT ASSIGNED
NOT ASSIGNED	◀ A9	NOT ASSIGNED
NOT ASSIGNED	◀ A10	NOT ASSIGNED

** SWITCH # 6 SHOULD BE SET TO OFF UPON FINAL INSTALLATION.

6 FILLING THE SPA & COVER

Before installation, a qualified technician must complete and sign off the Pre-installation checklist referenced on page 21. After startup and all required checks, complete the Installation checklist and owner handover on page 28. Retain the signed completion record with the installation documentation. A digital copy of every checklist must be provided to your Casa Blui Installations manager.

All electrical work must be performed by a licensed/qualified electrician and comply with all applicable national and local electrical codes and inspection authority requirements. If there is any doubt about soil bearing capacity or floor load ratings, a qualified geotechnical or structural engineer must be engaged.

Perform a preliminary cleaning of the spa using a soft cloth or non-scratch sponge with a little soap and water. If using a commercial cleaner, make sure it is specifically recommended for acrylic surfaces and always spot-test it in an inconspicuous area first. Never use abrasive powders, scouring pads, abrasive polishing creams, or solvents such as acetone, gasoline, paint thinners, varnishes, or similar chemicals, as they may scratch or irreparably damage the spa surface. Rinse thoroughly with clean water and remove all cleaner residue before filling the spa.

Before filling, once again check the quality of the water supply. This is very important for the well-being of the users and for the spa's durability.

Use a garden hose and water meeting Fill Water Requirements on **page 15**. With power OFF, fill to approximately 3 in (7.6 cm) below the shell's top edge. Do not overfill. Once filled, follow Initial startup on **page 28**.

⚠ Do not leave the spa uncovered, empty, and exposed to direct sunlight.

Prolonged UV and heat can cause warping, discoloration, and surface damage to the spa and its accessories, and damage caused by direct exposure to sunlight is not covered by the warranty. If the spa must be drained, keep it shaded and covered, and refill it promptly. A UV-resistant protection cover is recommended to help protect the shell and equipment from sun damage and falling debris. A fitted thermal cover also helps retain warmth efficiently.

The cover is especially useful if the spa is installed outdoors. In exposed areas, consider positioning the spa near walls or privacy screens to reduce heat loss. Casa Blui cover options also include lockable tie-down straps designed for long outdoor service.

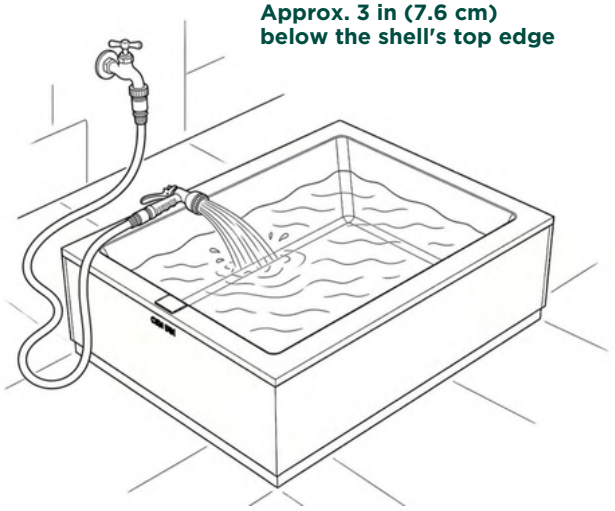

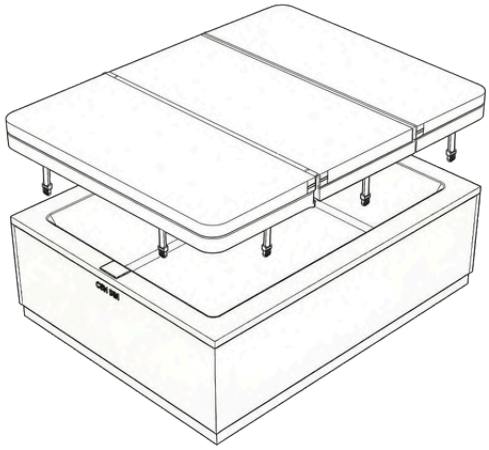

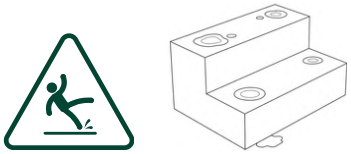

⚠
- The spa steps **ARE NOT** rated as **"Anti-slip"**, they are made of solid surface material & can be slippery when wet. **Commercially available Non-slip & waterproof adhesives can be applied for extra grip.**
- The spa cover **IS NOT** guaranteed to withstand sustained unusually strong winds, Any weather-related damage is not covered by warranty.

COVER STRAPS USE

If provided with CB Cover straps, you will be able to further secure your CB cover to your spa's cabinet. The Installation process is as follows:

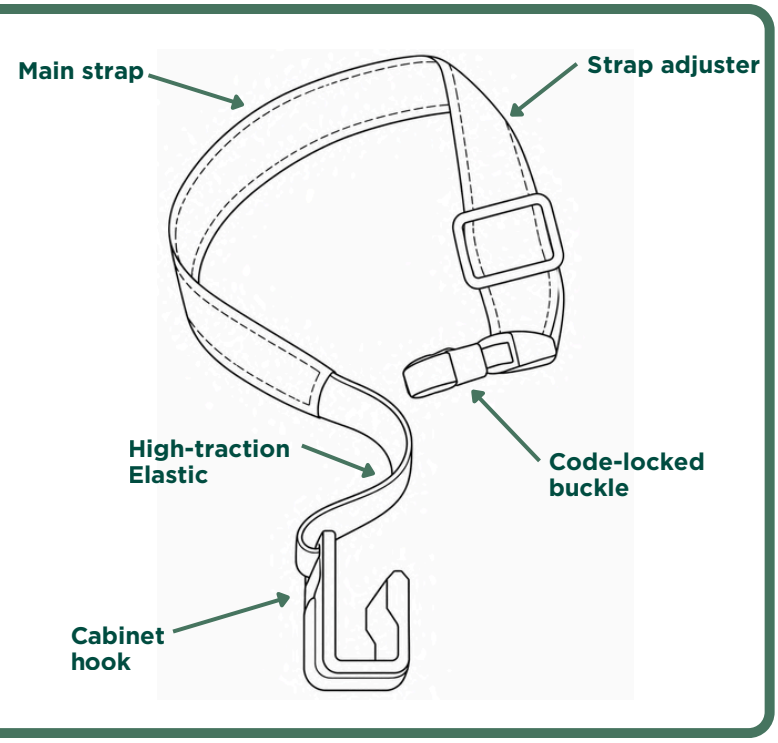

1. Connect the Cover's male buckle with the Strap's female code-locked buckle, lock if required.

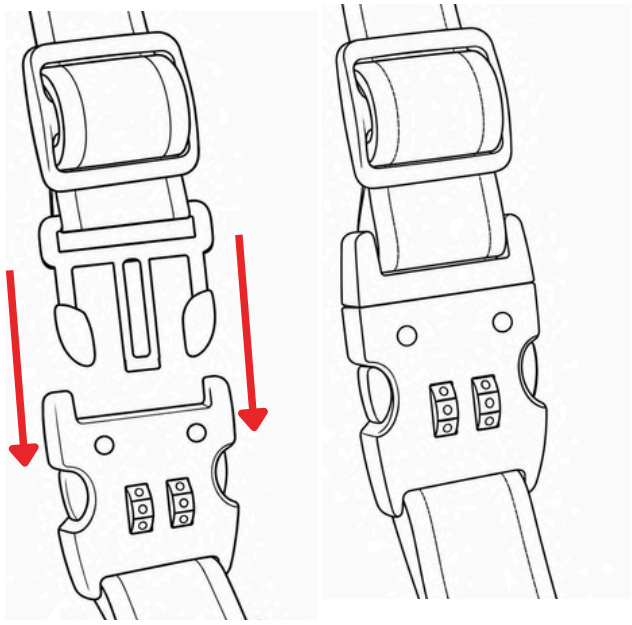

2. Adjust and secure your cover's straps, make sure they are tight and properly threaded through.

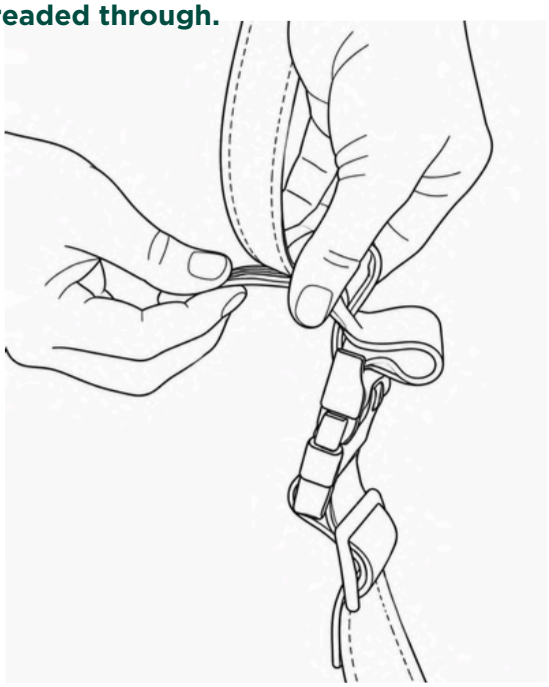

3. Reach the hook down to the bottom edge of the cabinet's panel, stretch the elastic and make sure the hook has been secured snuggly to the panel.

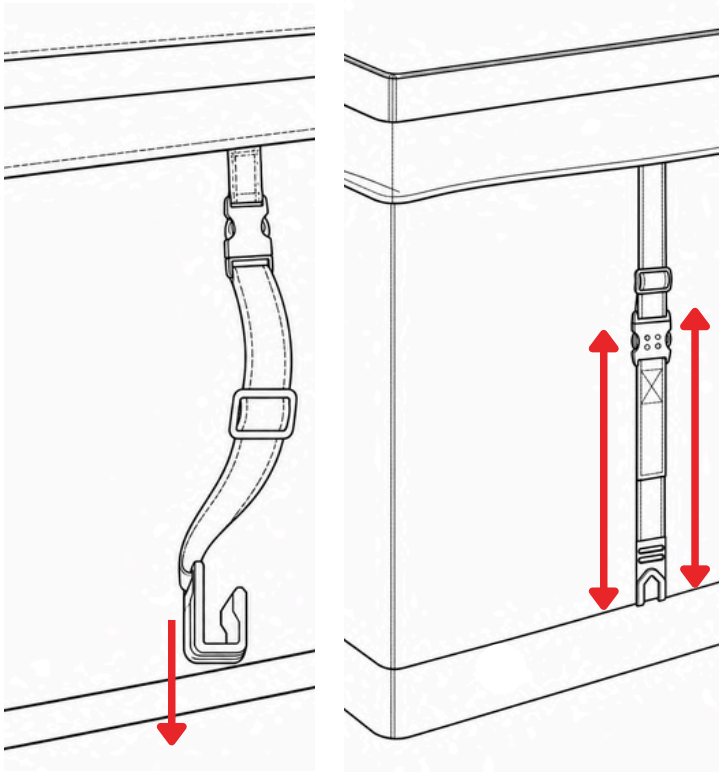

Repeat step 2 if necessary.

7 INITIAL STARTUP

⚠ Before removing the filter, draining the spa or servicing equipment, switch OFF all spa supply circuits and prevent restart. Apply lock-out/tag-out where required.

After filling to the level specified on **page 26**:
1. With power OFF, check for leaks and secure required covers/panels before switching power ON.
2. Follow the display's priming prompt. Run each fitted pump and verify steady water flow.
3. If flow is absent or a flow fault appears, switch power OFF and contact your dealer.
4. Test each external GFCI per its instructions. Confirm heating, temperature and water chemistry.
5. Set the time and filter cycles. Before use, complete the Installation checklist.

Before initial startup, check that the filter cartridge is correctly installed and the filter housing is properly closed. For routine cleaning and replacement, see Filtration on **page 46**. After rinsing, allow the cartridge to air-dry completely before reinstalling.

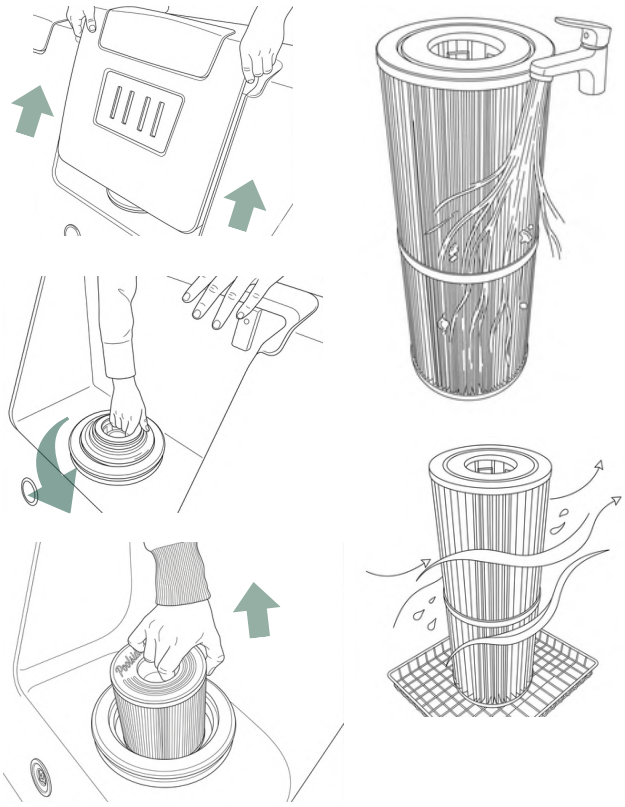

DRAINING THE SPA

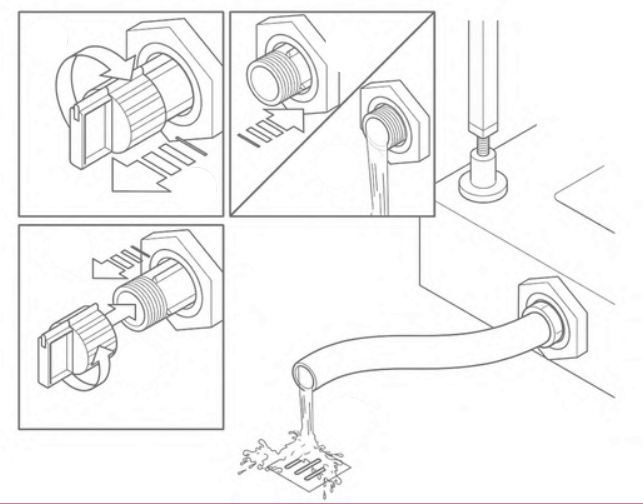

Before draining, switch OFF all spa supply circuits and prevent restart. **Never** operate pumps or heaters while the spa is empty or draining. Open the drain valve only for emptying; close it before refilling.

Emptying takes place through the spa's manual emptying system by gravity, through a drainage valve of 3/4". If it is necessary to refill the spa, use a manual filling system with a garden hose or similar and fill the spa through the top, with clean water, to the level specified on **page 26**. After refilling, repeat Initial startup on this page.

Drain the spa in accordance with applicable local regulations.

8 Installation checklist & owner handover

After startup, verify: no leaks; normal flow, heating and fitted controls; external GFCI tests passed; water temperature (**page 3**), balance and sanitizer residual (**pages 15 and 48–49**); time/filter cycles set; panels and cover secured.

Demonstrate operation, electrical isolation, GFCI/water testing and cover securing. A qualified technician must record and sign off completion before handover.

SPA INTERFACE USE

1 WIFI NETWORK REQUIREMENTS 30

2 YOUR SPATOUCH™ 4 31

3 NAVIGATION 32

4 PUMPS, LIGHTS AND CONTROLS 33

5 SETTING THE TIME AND UNITS 34

6 SET THE TEMPERATURE 35

7 SETTING FILTER CYCLES 36

8 HEAT SETTINGS 37

9 SLEEP, LOCKS AND MESSAGES 38

10 CONTROLMYSPA APP 39

1 WIFI NETWORK REQUIREMENTS

General disclaimers

- Casa Blui is not responsible for interruptions, failures, or delays in communication between the spa and Balboa's servers **(ControlMySpa)**, as this service is provided and managed by a third party. Casa Blui's scope is **limited** to linking the spa to the customer's app and confirming that the initial configuration is completed correctly.

- Balboa initial server connections can **take up to Two weeks** after first request.

BASE REQUIREMENTS

- **2.4 GHz Wi-Fi is typically required (802.11 b/g/n).**
- **5.8GHz networks may not be supported.**
- **Standard home router connections are recommended (Open / WEP / WPA / WPA2). Enterprise-level security may not function properly.**
- **Router channels between 1 & 11 are commonly required.**
- **A strong Wi-Fi is recommended at the Spa location,ideal levels range from -50dBm to -25dBm.**
- **Guest hotspot networks that use login portals may bring compatibility issues.**
- **Enterprise authentication methods(802.1X / RADIUS / WPA/WPA2 Enterprise) may not be supported.**
- **Mesh router systems may not be reliable in some installations.**

IMPORTANT NOTE:

Non-compliance with these guidelines may affect the performance or hinder the network connectivity features as a whole. Always make sure a strong signal is present at the spa's location at all times, the use of WIFI extenders may be necessary in some cases.

2 YOUR SPATOUCH™ 4

TOUCH TO START

Use your fingertip to tap controls, swipe between screens or scroll through lists. Complete Initial startup on **page 28** before operating the spa.

Screens and available functions may vary with the installed equipment and software version.

To wake the panel, touch the screen and follow any on-screen unlock prompts. If prompted, tap “1” and then “2”. The Home screen appears after the wake sequence.

MAIN SCREEN - KEY FUNCTIONALITIES

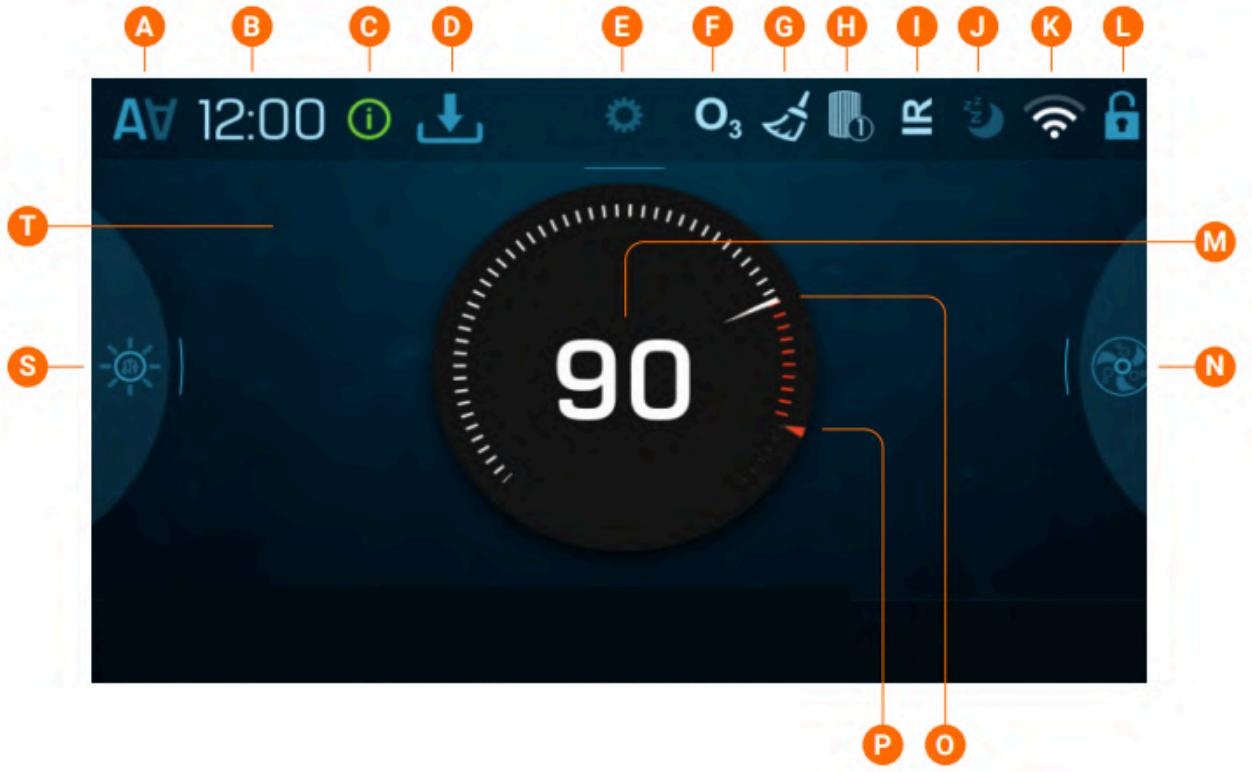

A – Invert display.
B – Time.
C – Message (not always present).
D – Download software update.
E – Settings.
F – Ozone is running.
G – Cleanup cycle.
H – Filter cycle 1 or 2.
I – Heat mode.
J – Sleep mode.
K – Wi-Fi / app connection status.
L – Panel and/or settings are locked.
M – Water-temperature display and control.
N – Spa device controls.
O – Current water-temperature indicator.
P – Set-temperature indicator.
S – Spa lighting controls.
T – Home screen.

3 NAVIGATION



A – Swipe down here to view the Settings menu.
B – Swipe right here to view the spa devices screen.
Q – Swipe right here (if available) to view the Chromazone screen.
R – Change the set temperature.
S – View the message screen.



D – Navigate back to the Home screen.
E – Increase/decrease display brightness.
F – Navigate to the previous screen.
G – Enter the Time screen.
H – Select temperature units (°F/°C).
I – Enter the language screen.
O – Swipe up/down to view the Settings menu.
P – Settings screen.

4 PUMPS, LIGHTS AND CONTROLS

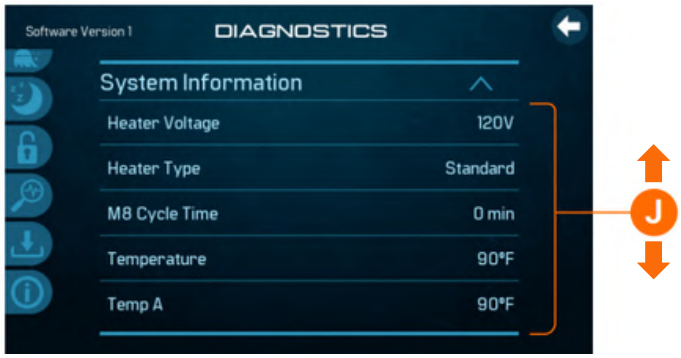

J – Scroll up/down to review the list.

Illustrative diagnostics screen. **CasaBlui heater supply: 240 V. Do not change factory configuration settings.**



K – Toggle buttons.
L – Save changed settings.
M – Swipe up/down to change the settings.
N – Cancel changed settings.



OPERATING PUMPS AND LIGHTS
Tap an available massage-pump control to change its operating state. Use the lighting control for the spa lights. Available states depend on the fitted equipment. A circulation-pump icon may show status only.

T – Swipe down to return to the Home screen.
U – Spa devices screen.
V – Available spa screens.

Only fitted functions are available; do not assume every device shown in this example is installed.

5 SETTING THE TIME AND UNITS

1. Open Settings.

From the Home screen, swipe down from the Settings icon at the top-center of the screen.

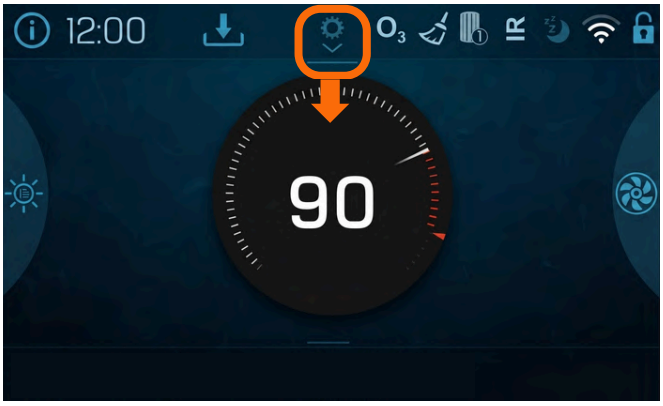

2. Tap General.

Scroll through the Settings list if the General button is not visible.



3. Tap the displayed time.

In General settings, tap the time field to open the time-setting screen.



4. Set and save the time.

Set hours/minutes, AM/PM and 12/24-hour format. Tap the check mark to save or × to cancel.



Check the clock before programming filtration. In General, use Units to select °F (Fahrenheit) or °C (Celsius). Menu labels may vary with software.

6 SET THE TEMPERATURE

1. Open the temperature screen.

From the Home screen, tap the center of the temperature display.

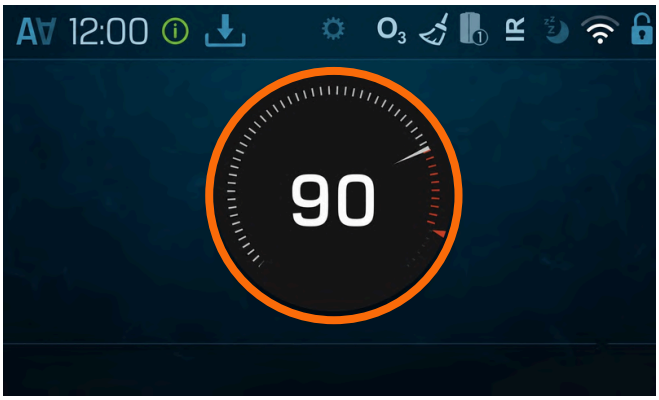

Current water temperature and set temperature are shown separately.

2. Set the desired temperature.

Tap + or −, or drag the set-temperature marker. The set value is the target, not the current water temperature.

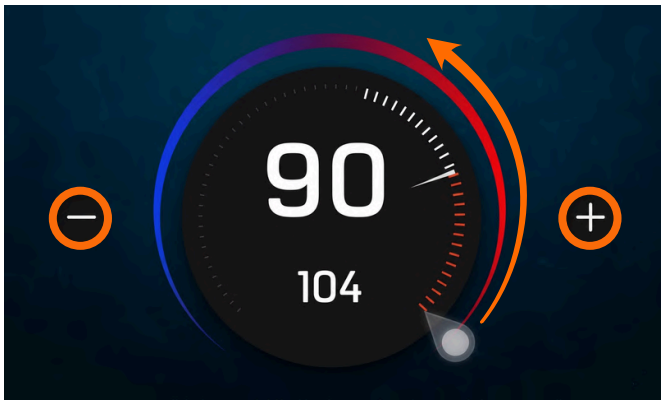

Large number: current water temperature; tap to return Home.
Small number: set temperature.

3. Heating indicator.

In the interface shown, the water-temperature number turns red and an upward arrow appears while the heater is on.

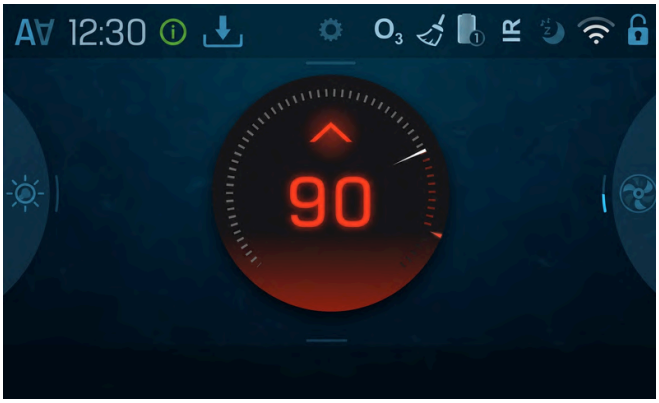

Note: Dashes instead of temperature

A current reading is not yet available. This can occur at startup or when no recent reading has been taken. Allow normal water circulation and follow the panel prompts. If the reading does not return after normal startup, or a flow warning appears, contact your dealer.

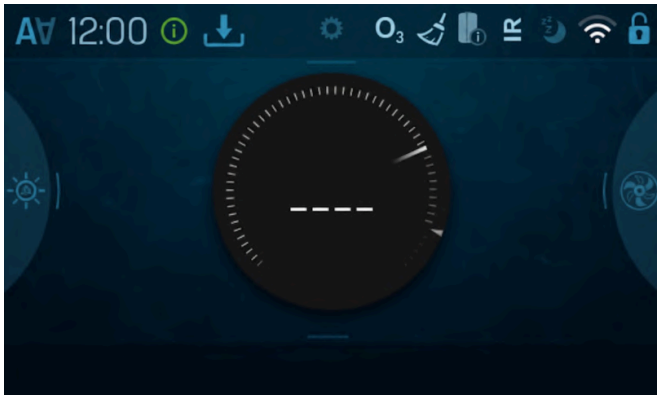

Before entering, check the actual water temperature with an accurate thermometer and follow the Safety instructions on **page 3**.

7 SETTING FILTER CYCLES

1. Open the filter cycles menu

Swipe down to open Settings, then tap “Filter Cycles”.



2. Select a filter cycle time.

Tap the start or end time you want to change. Set the two times separately.



3. Set and save the time.

Scroll to the required time and check AM/PM. Tap the check mark to save, or × to cancel. Repeat for the other times.



4. Enable or disable filter cycle 2.

Tap the dark-blue “2” button to enable the second cycle. Light blue indicates enabled; dark blue indicates disabled. Check the displayed times after saving.



Set the clock first. Times shown are examples, not a recommended schedule for every spa. Follow the filtration program specified for your model and usage.

8 HEAT SETTINGS

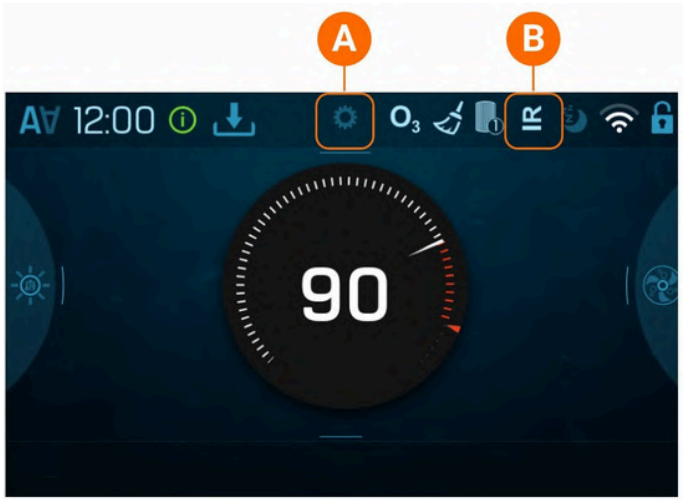

Choose Ready or Rest mode to control when the spa heats the water.

1. Swipe down from Settings (A).
2. Tap Heat Mode (D).
3. Select the heat mode (F).
4. Select the temperature range (G).
5. If available, choose the M8 setting (H).

Menu labels may vary with software.

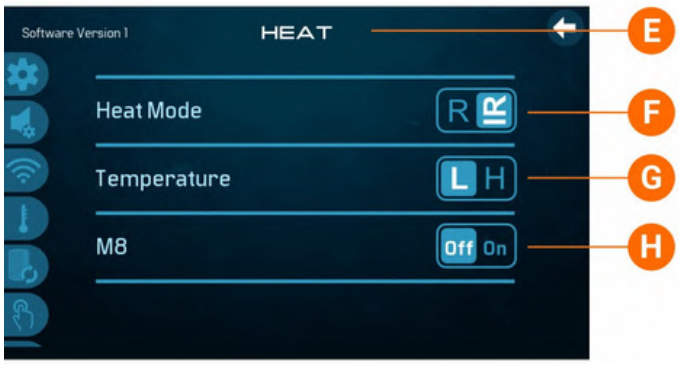

HEAT MODE

The Home screen shows the current heat-mode indicator (B).

Ready mode maintains the water close to the set temperature and is suitable for frequent use.

Rest mode heats during scheduled filter cycles. The water may need time to reach the set temperature before use.

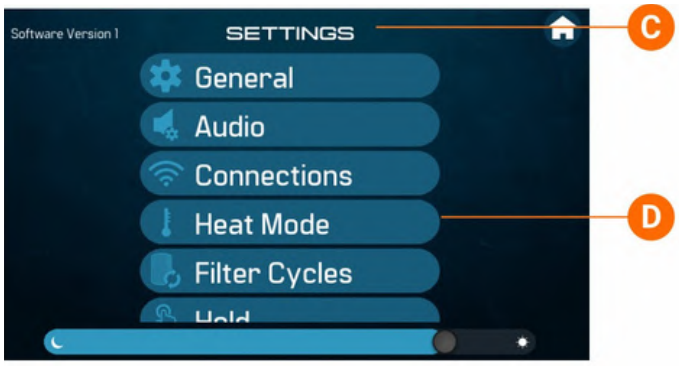

TEMPERATURE RANGE

Depending on the installed configuration, High may allow 80–104°F and Low may allow 50–99°F.

These are adjustment limits, not bathing recommendations. Follow the Safety instructions on **page 3**.

M8 — IF AVAILABLE

On supported control systems, M8 adjusts temperature-checking activity based on water-temperature conditions. It is not available on every installed configuration.

9 SLEEP, LOCKS AND MESSAGES

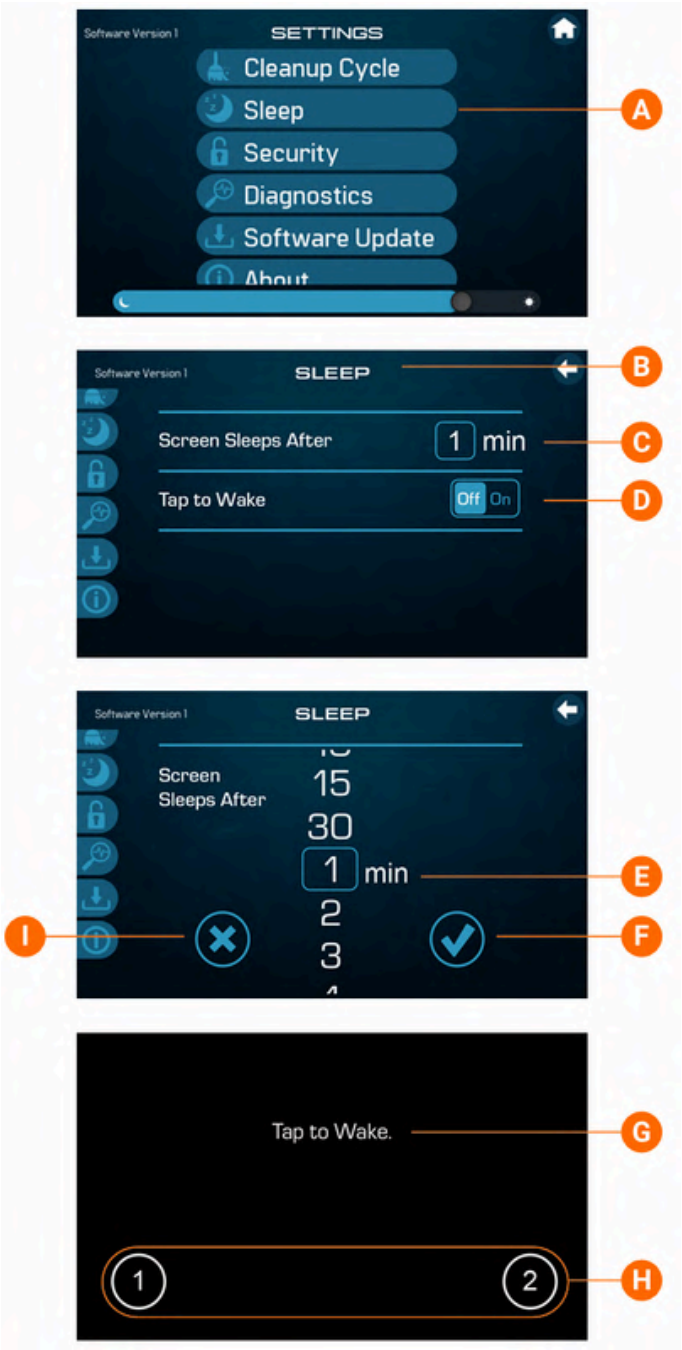

SCREEN SLEEP

1. Open Settings, then tap Sleep (A).
2. Tap Screen Sleeps After (C).
3. Scroll to select the delay (E). Short delays help reduce accidental activation by water.
4. Tap the check mark (F) to save, or × (I) to cancel.

Touch the screen to wake the panel and follow its prompts. If the “1” then “2” prompt appears, tap them in that order. Tap to Wake (D) affects the wake method; available options depend on software.

Screen sleep affects the display. It does not select the heating mode or disconnect power.

MESSAGES

Tap the message icon to read the full message. Record its wording or code. Follow the displayed instructions and contact your dealer if a warning persists. For flow problems during startup, see **page 28**.

LOCKS AND HOLD

Open Security or Locks, as shown on your panel. Select the available panel/settings lock and follow the on-screen confirmation and unlocking prompts. Menu labels and locks depend on software.

If Hold is available, it temporarily pauses operation; it does not electrically isolate the spa. Before maintenance, switch OFF all spa supply circuits and prevent restart.

10 CONTROLMYSPA APP

1. Download the app.

ANDROID

iOS

BEFORE PAIRING
Have your Wi-Fi network name and password available. On the panel, open the network connection settings, select your network, enter its password and confirm connection. Menu labels vary by software. Then complete account setup below and pair the spa.

2. Sign up / sign in.

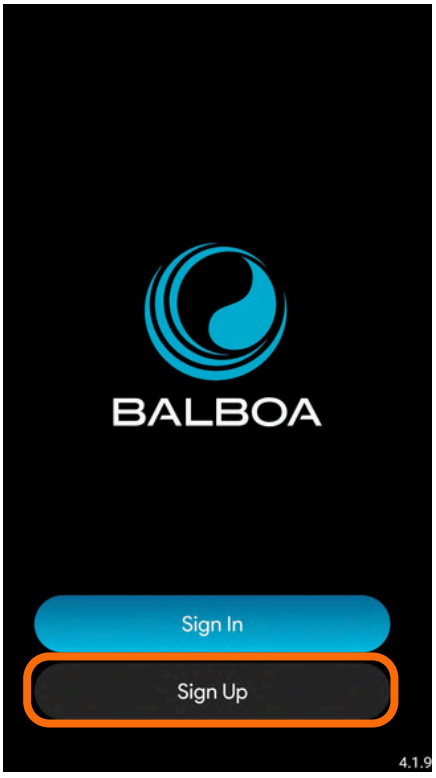

3. Enter your email.



EXISTING OR NEW ACCOUNT
If you already have a ControlMySpa account, sign in, skip new-account steps 3–6 and continue with pairing at step 7. Otherwise, follow the app prompts to create and verify your account. Follow the app's current password requirements and email-verification instructions.

WI-FI AND CONTROLMYSPA — ACCOUNT SETUP

4. Create a password.

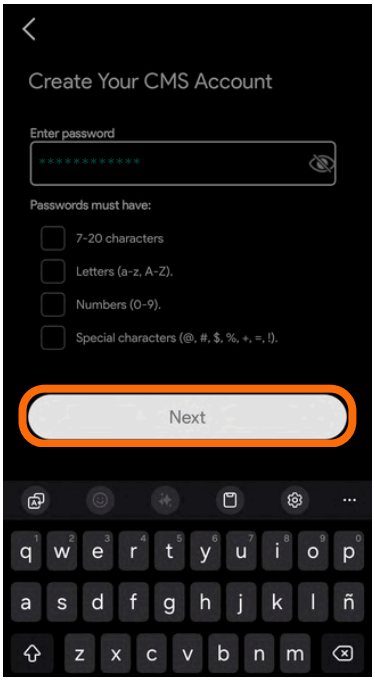

5. Enter your name.

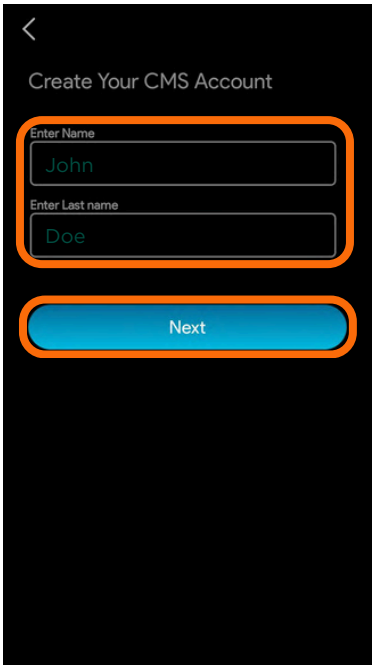

6. Verify your email.

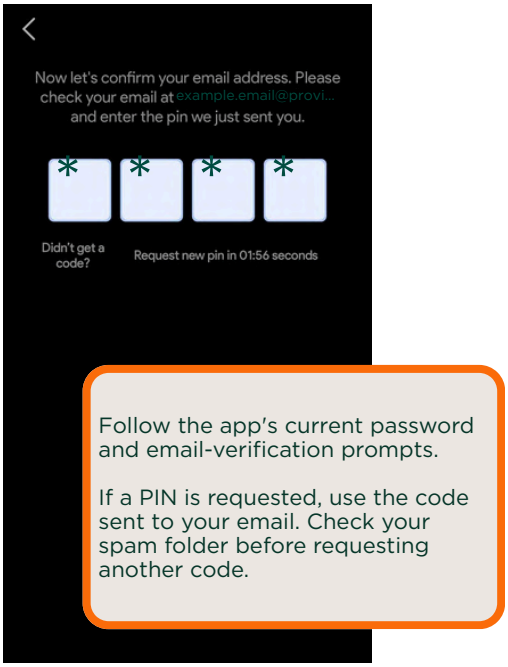

Follow the app's current password and email-verification prompts.

If a PIN is requested, use the code sent to your email. Check your spam folder before requesting another code.

7. Pair with your spa.

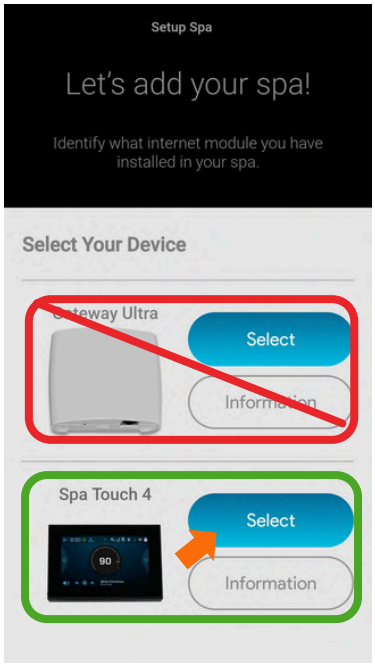

WI-FI AND CONTROLMYSPA — PANEL PAIRING

8. Open the panel Settings menu.

From the Home screen, swipe down from the Settings icon at the top-center of the screen.

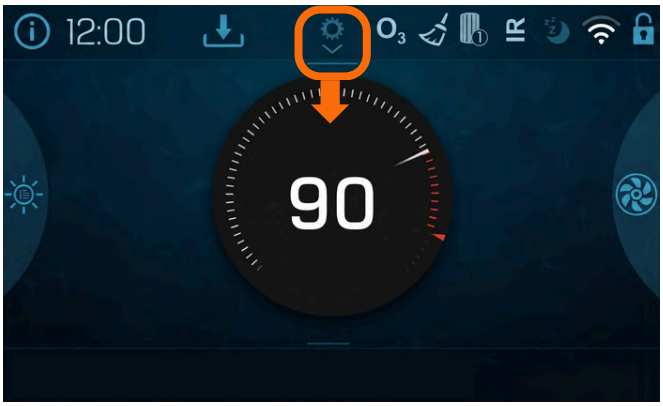

9. Tap Connections.

Scroll through the Settings list if needed. Menu labels may vary with installed software.



10. Open ControlMySpa settings.

Find the ControlMySpa / CMS screen using the connection settings available on your panel.

11. Enter the Casa Blui CMS code.

Casa Blui CMS code: WNZ-69070

This code is common to Casa Blui spas. The panel will display a QR code for pairing your spa.



WI-FI AND CONTROLMYSPA — COMPLETE PAIRING

12. Allow camera access when prompted by the app.

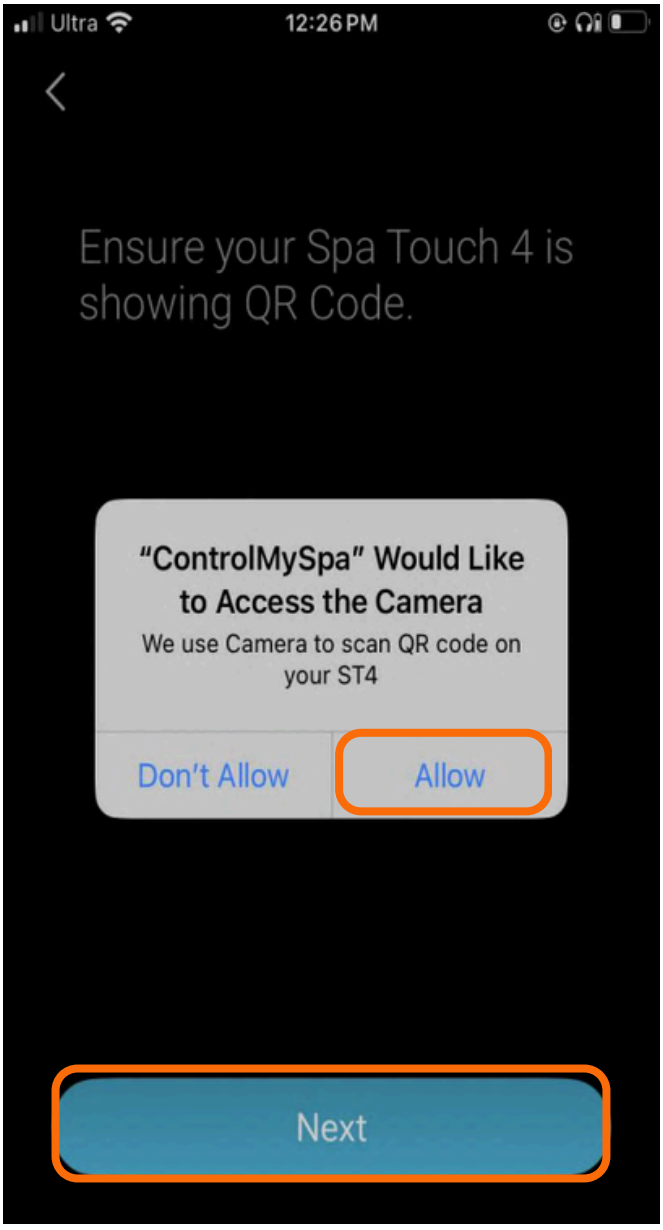

13. Scan your spa panel's QR code.

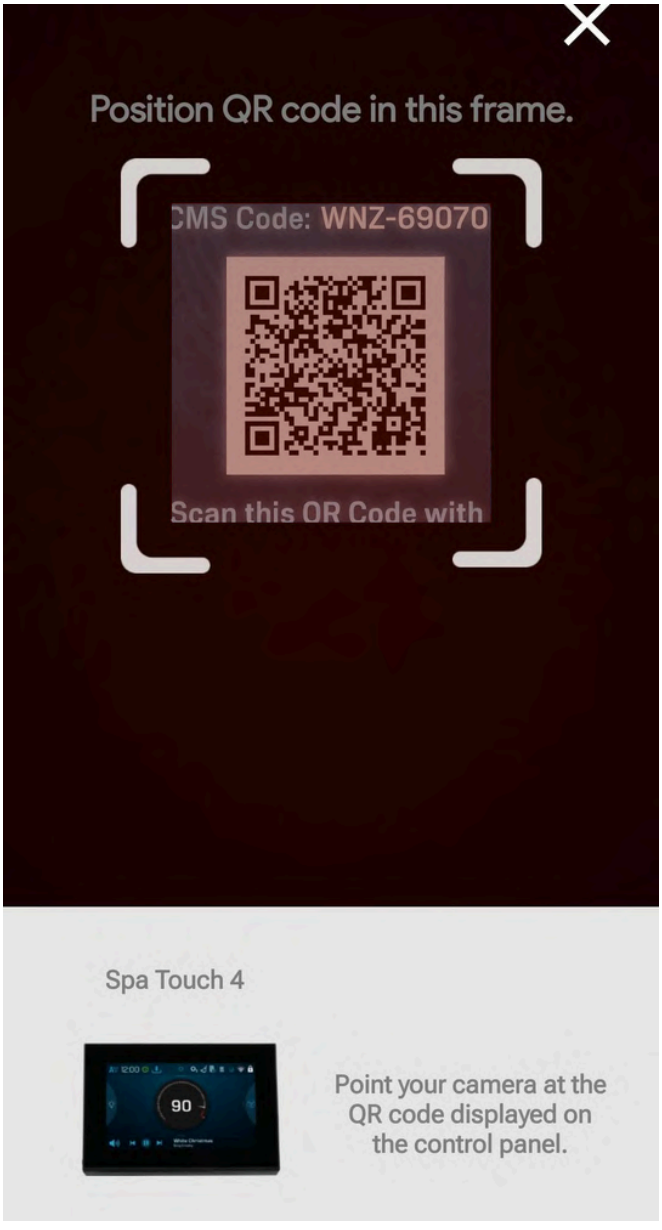

COMPLETE PAIRING
Scan the QR code displayed on your own spa panel, not the example in this manual. Complete the remaining app prompts, including any email confirmation requested, and confirm that your spa appears in your app and is online.

If you have successfully paired your unit with your CMS app and account but connection to the BALBOA servers is pending or offline. Please wait until the average two week window has passed before contacting Casa Blui's customer support. Some units/accounts may take longer than others to be recognized and connected to the servers.

GENERAL MAINTENANCE

1 SAFETY & MAINTENANCE WARNINGS 44

2 CARE AND CHEMICAL SAFETY 44

3 FILTRATION 46

4 WATER MAINTENANCE 47

1 SAFETY & MAINTENANCE WARNINGS

Before maintenance or filter removal, switch OFF all spa supply circuits and prevent restart (lock-out/tag-out where applicable). Electrical or mechanical repairs require qualified personnel.

Do not handle or service the equipment with wet hands or feet.

Allow components to cool before touching them.

Use only manufacturer-approved parts and follow all product instructions.

2 CARE & CHEMICAL SAFETY

Acrylic shell care

- Use a mild, non-abrasive, low-foaming multipurpose cleaner specifically labeled as suitable for acrylic spa surfaces. Apply with a soft cloth or non-scratch sponge; rinse thoroughly, remove all residue and dry with a clean microfiber cloth.
- If using any commercial cleaner, confirm it is specifically recommended for acrylic surfaces by its manufacturer. Always spot-test in an inconspicuous area first.
- Never use abrasive powders, scouring pads, or abrasive polishing creams that can dull or scratch the surface.
- Keep the acrylic away from ketones or esters (e.g., acetone), acetates (e.g., nail-polish remover or dry-cleaning agents), chlorinated or aromatic solvents, gasoline, paint thinners, varnishes, or similar chemicals.
- Wipe away dust and smudges with a soft, slightly moist cloth; dry immediately to prevent water spots.
- For grease, oil, paint or ink marks, use only a stain remover approved by the shell manufacturer for the acrylic surface. Follow its instructions, then rinse thoroughly and dry.
- Do not use razors, scrapers, or any sharp tools on the acrylic.
- For light surface marks, use only a non-abrasive product approved by the manufacturer for acrylic. Buff gently with a clean cloth and follow the product instructions. Avoid waxes that may leave slippery residue on areas contacted by bathers.
- **Weekly:** Clean the sections of the spa above the waterline (areas not submerged) and, if desired, apply a manufacturer-approved, non-abrasive acrylic polish to maintain gloss. Do not polish floor or seating areas where slip resistance is important.

ATTENTION: **Never leave the spa uncovered, empty, and exposed to direct sunlight. Prolonged UV and heat can cause warping, discoloration, and surface damage that is not covered by the warranty. If the spa must be drained, keep it shaded and covered, and refill promptly.**

Aluminum bond cabinet care

Wipe with a soft cloth and a mild cleaner suitable for the cabinet's finish. Follow the finish manufacturer's care instructions. Do not use abrasives, polish the finish or pressure-wash the cabinet. Keep water and cleaning products out of vents and the equipment compartment. See page 23 for panel removal and reinstallation.

Cover and Pillow care

Clean the cover, its underside and pillows with products suitable for their materials, **following their manufacturers' instructions**. Rinse away cleaner residue. **Inspect** the cover, straps, fasteners, locks and pillows for damage; **arrange replacement of damaged parts**. Release all cover locks before removal. Do not lift the cover by its securing straps. Remove pillows only as instructed for their actual fixings.

Chemical handling guidelines

Read the product label before each use. Use spa-specific products and the protective equipment specified on the label.

• Store chemicals in their original labeled containers, closed, dry, cool and out of sunlight, away from children and pets.

• Separate incompatible products. Keep them away from heat, flames and combustible materials. Never store chemicals in the spa cabinet.

• Never mix concentrated products or different sanitizers. Use clean, dedicated measuring tools and handle one product at a time.

• Predissolve only if the label directs it. When directed, add the product to water; never water to the concentrated product.

• Dose for the water volume in the specifications. Add products separately, with no bathers present. Follow label circulation and waiting times.

• Avoid dust, fumes and splashes. Wash hands after handling. Follow label emergency directions for spills or exposure and local disposal requirements.
Keep the area secured while the cover is open. Retest after treatment and meet the label's re-entry requirements before use.

IMPORTANT NOTE:

Always use manufacturer-approved cleaning agents for regular surface maintenance. When in doubt, contact your account manager for assistance and official recommendations on your area of concern.

3 FILTRATION

REGULAR MAINTENANCE

Inspect the filter weekly. Rinse as needed, sooner with heavy use or reduced flow, and plan a complete cleaning about monthly. Follow the installed cartridge manufacturer's instructions.

Do not use dish soap, bleach or other household cleaners on the filter. Avoid the use of pressure washers and dishwashers.

1. Switch OFF all spa supply circuits and prevent restart before removing the cartridge.
2. Rinse from top to bottom with a gentle garden-hose stream, cleaning between the pleats without damaging them.
3. If needed, use a compatible filter cleaner for its labeled contact time, then rinse thoroughly.
4. After rinsing, allow the cartridge to air-dry completely before reinstalling.
5. Reinstall correctly and close the housing securely before restoring power. Check normal water flow; stop and contact your dealer if flow is not restored.

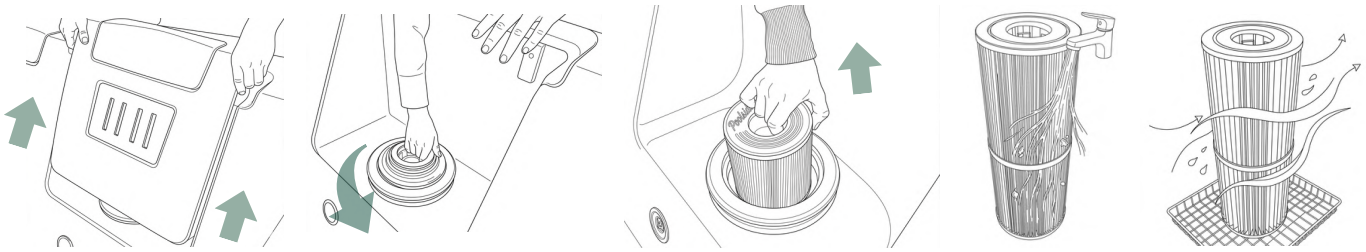

DEEP SOAK CLEANING

Schedule a complete cleaning approximately once a month, sooner when the filter condition or usage requires it. Include filter cleaning with each drain/refill. Use only products and soaking methods permitted by the installed cartridge's manufacturer.

1. Prepare the filter-cleaner solution according to its label.
2. Immerse and soak only as permitted by the cartridge manufacturer, for the labeled duration.
3. Rinse out all cleaner residue; allow the cartridge to air-dry completely.
4. Keep a clean, dry spare cartridge to use while the other dries. Never operate the spa without its filter correctly installed.

INSPECTION AND REPLACEMENT

Inspect at every cleaning. Replace a cartridge with **torn, frayed or flattened pleats**, **cracked end caps**, **persistent odor** after cleaning or **reduced flow** that cleaning does not restore.

Follow the installed cartridge **manufacturer's replacement guidance**. Generic calendar intervals are **estimates**, not guaranteed service life. Use the correct replacement part specified for the spa.

Before returning to use, confirm that the housing is closed, flow is normal and the water meets the operating requirements. See Initial startup on **page 28**.

4 WATER MAINTENANCE

Water maintenance is one of the areas that requires the greatest attention due to its impact on safety, comfort, and equipment longevity. **The specific actions and frequency depend on the mineral content of the fill water, how often the spa is used, and the number of people using it.**

Changing the water **every 3 months** is the standard **schedule recommendation**. **Do not go longer than 6 months between water changes**. Change it sooner if needed because of heavy use, contamination or water that cannot be balanced.

NOTE:

An average use regime for a hot tub is established to be **1-2 sessions a week**, any use frequency greater than that may affect the water change scheduling requirements.

The three main points to consider are:

- **Filtration**
- **Chemical Analysis**
- **Disinfection of the water**

SAFE HANDLING AND USE OF CHEMICAL PRODUCTS

Before using any chemical product, always read the instructions on its product label and follow the manufacturer's recommendations.

- Assign one trained person to handle all spa chemicals.
- Keep products out of reach of children and pets.
- Measure carefully and add only the recommended amount.
- Store in sealed containers, in a cool, dry, well-ventilated place, away from sunlight.
- Avoid breathing vapors or dust; prevent contact with skin, eyes, and mouth.
- Wash hands thoroughly after handling chemicals.
- In case of spills or exposure, follow the emergency directions on the product label.
- Keep chemicals away from heat and ignition sources. Follow each label.
- Never store chemicals inside the spa cabinet or near electrical components.
- Add chemicals to water one at a time, allowing time between doses to prevent reactions.
- Do not add products while people are in the spa.
- Test water frequently for pH and sanitizer levels during frequent use.
- Use only products specifically designed for spas or hot tubs.
- Dispose of containers safely, following local waste regulations.

WATER TESTING

For optimal spa performance and low-maintenance water, keep pH, alkalinity, and hardness within the recommended ranges.

Check pH at least twice a day and before use. Test more often during heavy use. Complete a full water check at least once a week and after a refill. Do not use the spa if results are unclear or outside the approved ranges

- **pH:** Maintain between 7.2 and 7.8 for disinfectants to work effectively.
- **Alkalinity:** Keep between 80–120 ppm to stabilize pH and protect equipment.
- **Total hardness:** Keep between 250-500 ppm.

Balanced water ensures it remains clear, clean, and easy to manage over time.

Water Source: Tap vs. Well

Maintaining clean, high-quality water is essential for both spa hygiene and long-term durability.

- **Tap water**: Local water quality varies by location. Test it before filling, including metals where source-water conditions warrant it.

- **Well water:** Well water quality also varies and may require filtration or treatment. Test it before filling and select treatment from the results.

Use water that meets the Fill Water Requirements on page 15. Retest after treatment and before use.

Total water Hardness

It reflects the dissolved calcium and Magnesium particles in the water. It influences how corrosive or prone to scale-buildup the spa water is.

Very low hardness (“soft” water) is not recommended because it’s aggressive to equipment and can stain the shell.

Very high hardness (“hard” water) promotes scale on surfaces and components.

If hardness is high, ask Support about partial replacement with suitable lower-hardness water. A stain or scale control product does not remove calcium or lower hardness. If hardness is low, confirm the calcium test before using Calcium Increaser.

- Calcium Increaser raises primarily calcium hardness. Confirm the calcium level with a calcium hardness test and the target for your spa before adding it.

Water Alkalinity

Alkalinity refers to the concentration of alkaline compounds (such as carbonates, bicarbonates, and hydroxides) dissolved in the water.

When alkalinity drops below 80 ppm or rises above 120ppm, pH can become unstable, making it harder to maintain proper water balance.

If below 80ppm, add an alkalinity increaser (sodium bicarbonate); if above 120 ppm, lower with small doses of pH decreaser or partially dilute with fresh water. Run the pumps to circulate, then retest. Be sure the products are compatible with hot tubs.

Water pH

It measures the level of hydrogen ions (H^+) in the water, indicating its acidity or alkalinity. The recommended range is between 7.2 and 7.8 (neutral is 7). Maintaining this range helps:

- Protect bathers' comfort.
- Extend the lifespan of the spa's surfaces and components.
- Ensure sanitizing chemicals work effectively, reducing overall product use.

If pH level is below 7.2, add a **pH increaser** (sodium carbonate); if above 7.8, add a **pH decreaser** (sodium bisulfate). Run the pumps to circulate, then retest. Be sure the products are compatible with hot tubs.

WATER SANITIZATION

Maintaining the correct disinfectant level is essential to eliminate algae, bacteria, and other microorganisms that can develop in spa water. Overdosing should be avoided, as it may cause skin or eye irritation and can affect the spa's components.

The recommended primary disinfectant is bromine tablets, placed in a suitable feeder to dissolve gradually and provide a constant residual in the water. Test the bromine concentration daily and before each use, using an appropriate analyzer kit, and ensure it does not drop below the range of **2 to 6 ppm.**

If chlorine is used instead, maintain a **minimum** free residual chlorine level between **0.5 and 1.5 ppm**, and always operate within the optimal recommended levels in the label whenever possible**.** Always add chemicals separately and with no bathers in the spa.

When the sanitizer level is below the recommended range, increase dosing and allow the water to circulate thoroughly before retesting. If the level is above the range, circulate with the cover open to allow dissipation, or dilute with fresh water as necessary.

Secondary systems such as ozone or UV can support oxidation and water clarity but must never replace a continuous bromine or chlorine residual. All test results and corrective actions should be documented as part of the spa's maintenance records, and any stricter local regulations should take precedence.



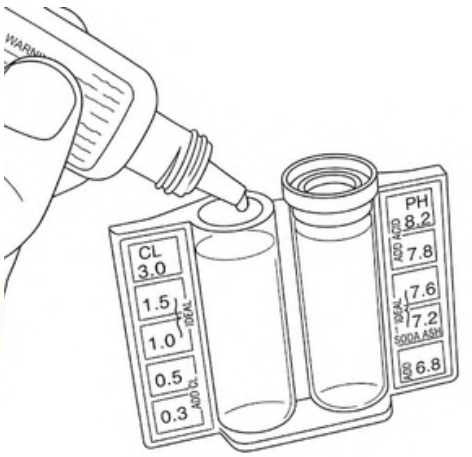

NOTE:

Do not mix bromine and chlorine products in the same dispenser.

Test pH at least twice a day and before use. If a result is too low, too high or unclear, **do not use the spa**. Follow the product label, circulate and retest before use.

© CASA BLUI

CASA BLUI

Casa Blui
Operational Headquarters: Miami, Florida, USA
Phone (+1) 954-737-2952
sales@casablui.com / www.casablui.com